Your Partner in Endoscopy

Richard Wolf Medical Instruments

Vernon Hills, Illinois

For over 100 years, Wolf has been a driving force and world-respected leader in the development and production of high-quality optics and instrumentation for minimally invasive surgery. With our broad background and expertise in endoscopy, Richard Wolf continues to develop, design and manufacture optics and precision instruments and equipment that many surgeons believe to be the finest available.

As a complete endoscopy company, we supply medical professionals and healthcare facilities with superior products for all endoscopic disciplines including General Surgery, Gynecology, Urology, ENT, Arthroscopy and Spine. We incorporate the same high-quality images that our customers have come to expect from our world-class optics in our video and documentation equipment which features single chip, 3-chip and HD imaging systems.

Richard Wolf Medical Instruments Corporation was founded in 1972, the first international subsidiary of Richard Wolf, GmbH, Knittlingen, Germany. In 1991 we moved into our comprehensive new facility outside Chicago in Vernon Hills, Illinois. The operation now supports U.S. customers with a nearly complete manufacturing and assembly operation, as well as with comprehensive repair, sales, service and marketing capabilities.

More than 1000 skilled, highly motivated employees worldwide, with state-of-the-art manufacturing processes and facilities, guarantee products and systems distinguished by exceptional quality and durable, long-lasting reliable performance.

Richard Wolf GmbH is proud to be one of the first endoscopy companies to receive certification by an accredited test organization for medical instrumentation in compliance with ISO 9001, ensuring our customers proven quality.

To promote the advancement and successful outcome of minimally invasive surgical procedures, we maintain a constant dialogue with leading physicians and the healthcare community.

Richard Wolf is committed to continually presenting new concepts and improvements to our physician and nursing partners. This on-going dedication to research has led to a myriad of innovations including modular instrumentation, magnetic-ball trocars, bipolar systems and HD video.

This catalog presents our latest product line for General Surgery and Laparoscopy.

Richard Wolf GmbH

Knittlingen, Germany

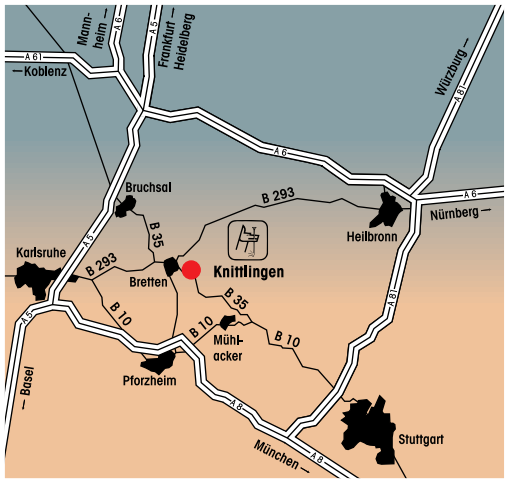

RICHARD WOLF GmbH
Postfach 1164 · D-75434 Knittlingen
Pforzheimer Straße 32 · D-75438 Knittlingen
Phone ++49 70 43 - 35-0 · Fax ++49 70 43 - 3 53 00

Our parent company, Richard Wolf GmbH in Knittlingen, Germany, has long been at the forefront of development and manufacturing of the finest optics and medical instrumentation. As one of five worldwide subsidiaries, we are proud to continue the Wolf heritage of excellence.

Worldwide Subsidiaries

USA
RICHARD WOLF
Medical Instruments Corp.
353 Corporate Woods Parkway
Vernon Hills, Illinois 60061
Tel.: 847-913 1113
Fax: 847-913 1488
www.richardwolfusa.com
sales&marketing@richardwolfusa.com

FRANCE
RICHARD WOLF France S. A. R. L.
Rue Daniel Berger
Z. A. C. La Neuvillette
F-51 100 Reims
Tél.: 26-87 02 89
Fax: 26-87 60 33

AUSTRIA
RICHARD WOLF Austria
Ges. m. b. H.
Lederergasse 32
A-1082 Wien
Tel.: 0 222-42 62 19
Fax: 0 222-408 70 84

UK
RICHARD WOLF UK Ltd.
Waterside Way
Wimbledon
SW17 OHB
Tel.: 0181-944 7447
Fax: 0181-944 1311

BELGIUM
N. V. Endoscopie
RICHARD WOLF Belgium S. A.
Industriezone Drongen, Landegemstraat 6
B-9031 Gent-Drongen
Tél.: 09-282.92.15
Fax: 09-282.92.16

Table of Contents

Laparoscopes

Mini Laparoscopes	7-11
5 - 10 mm Laparoscopes	12-14
Bariatric Laparoscopes	15
Operating Laparoscopes	16-18
Flexible Choledochoscope	19

Instrumentation

2 - 3.5 mm Mini Forceps	23-24
5 mm Forceps	25-45
10 mm Forceps	47-51
Bariatric Specialty Instruments	52-53
Needle Holders	55-58
Kleppinger Bipolar Forceps	63-69
PowerBlade Bipolar Forceps	70
Eragon Bipolar Forceps	71
Electrodes	73-75
Suction / Irrigation	76-85
Cannulas / Probes	86-89

Trocars

2 - 3.5 mm Trocars	93-94
5 - 5.5 mm Trocars	95-98
7 -10 mm Trocars	99-103
12.5 - 15 mm Trocars	104-105
Trotec Shielded Trocars	106
Dilatation and Extraction Instruments	107-109
Fascial Closure Device	110
Verres Needles	111
Insufflators	112-113

TEM Transanal Endoscopic Microsurgery

TEM Instrument Set	118-127

Thoracoscopy

Thoracoscopes	131-134
Trocars	135-137
Forceps and Cannulas	138-148
Mediastinoscopes	149-150
Forceps for Mediastinoscopy	151-155

Accessories / Parts

Trays/Scope Holders/Cables/Parts	159-185

Index 187-219

Laparoscopes

- Mini Laparoscopes
- Laparoscopes 5 -10 mm
- Bariatric Laparoscopes
- Operating Laparoscopes
- Flexible Choledochoscope

Micro Laparoscopes, *2 mm*

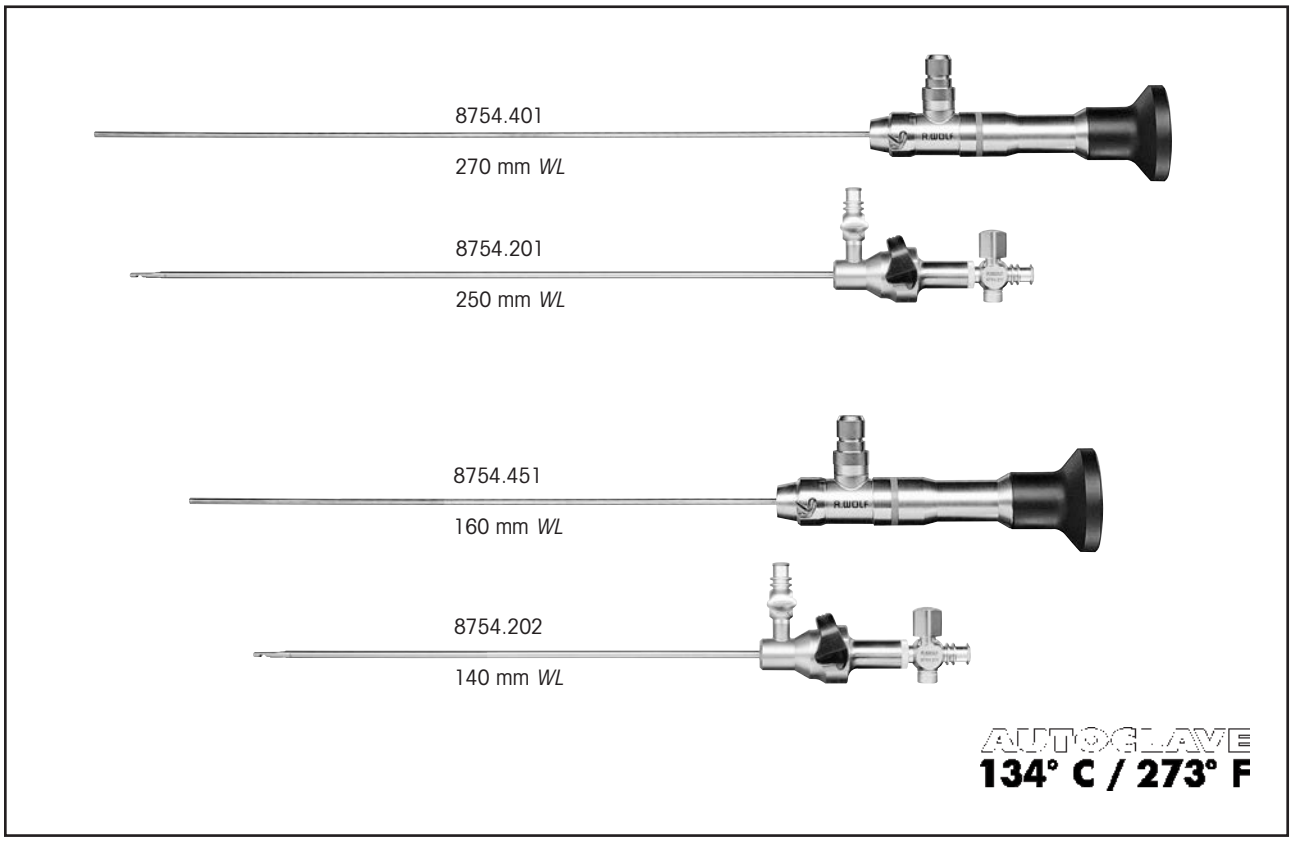

Micro Laparoscopes

50,000 pixel high resolution fiber quartz optics
Quick connect locking mechanism
2 mm diameter permits minimally invasive abdominal access
Titanium sheath construction provides both durability and longevity

Standard version 270 mm WL:
Micro laparoscope,
0°, 2 mm Ø, 270 mm WL 8754.401

***Verres needle** (8754.211), 2.3 mm Ø with*
Outer sheath (8754.221), 250 mm WL.....8754.201

Short version 160 mm WL:
MIcro laparoscope
0°, 2 mm Ø , 160 mm WL.....8754.451

***Verres needle** (8754.212), 2.3 mm Ø with*
Outer sheath (8754.222), 140 mm WL.....8754.202

Laparoscopes, *3.5 mm*

HD Compatible

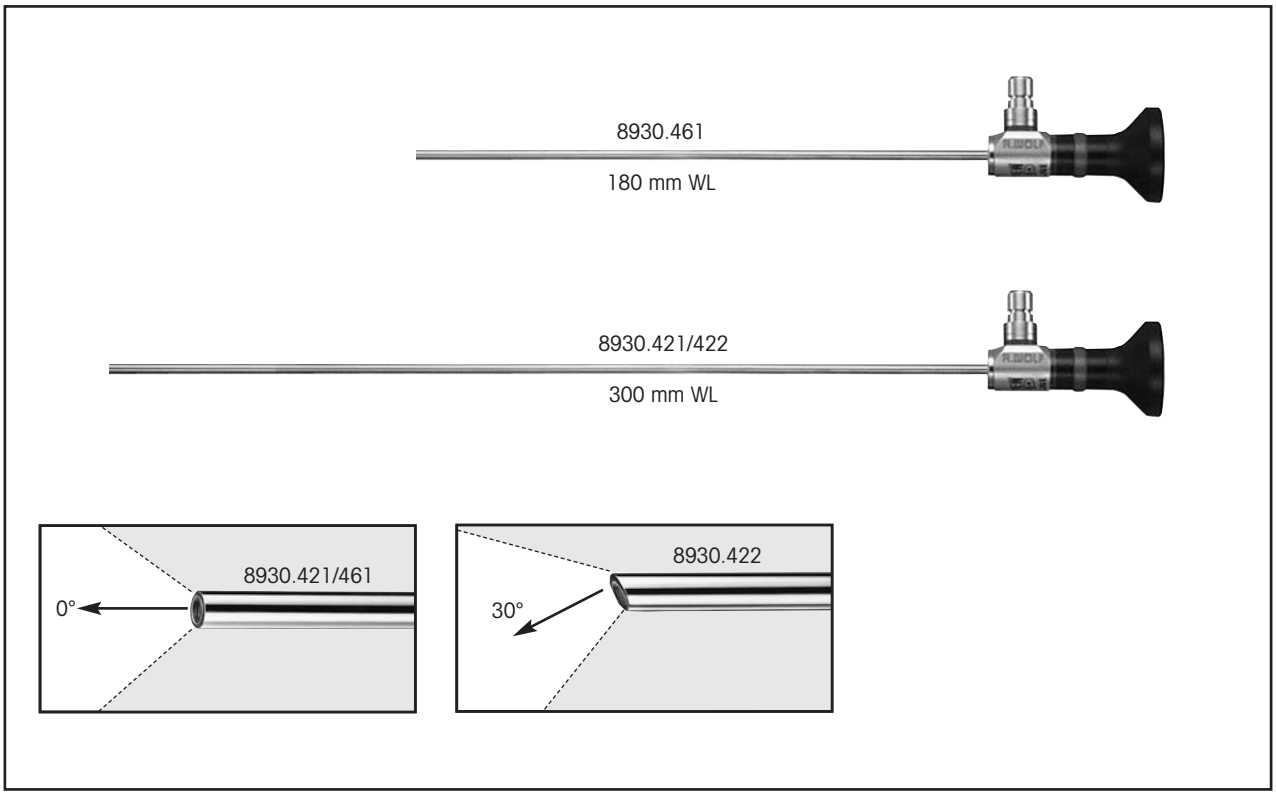

PANOVIEW PLUS laparoscope, 3.5 mm diameter, 180 mm WL
with fixed eyepiece,
0°.....8930.461

PANOVIEW PLUS laparoscope, 3.5 mm diameter, 300 mm WL
0°.....8930.421
30°.....8930.422

ALSO AVAILABLE:
PANOVIEW PLUS laparoscope, 3.3 mm diameter, 300 mm WL
with fixed eyepiece,
70°.....8660.425

Fiberoptic light cable,
3.5 mm bundle, 3M WL 8061.0356

Autoclavable
134°C / 273°F
Pre-Vac Cycle

Quintero
Mini-Operating Laparoscope, *3.8 mm*

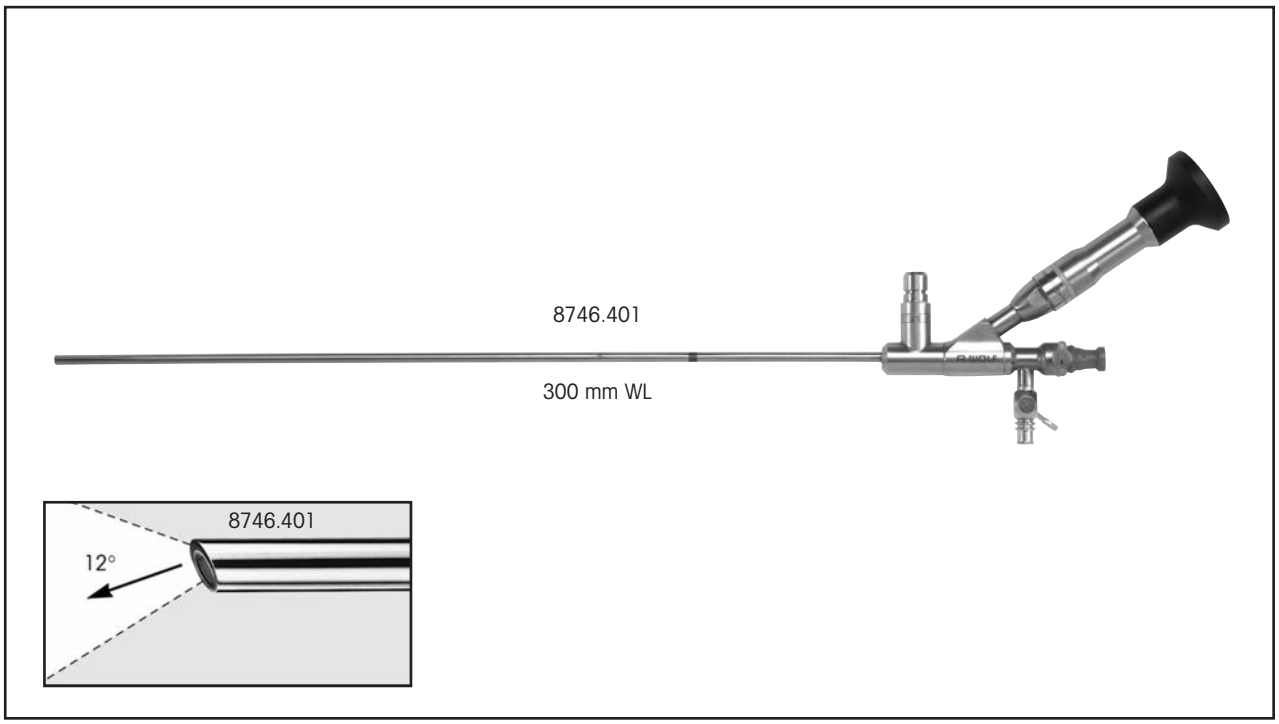

Fiber optic laparoscope, 3.8 mm diameter, 300 mm WL, 5 Fr. working channel,
high resolution with 50,000 pixels
12° 8746.401

Fiber optic light cable,
2.5 mm bundle, 3M WL 8061.0256

Replacements
Metal port fitting 15256.382
Mini sealing membrane, pkg/10 ..... 89.101
Sealing caps for working channel, to 1 mm 88.005RE
Sealing caps for working channel, 1-2 mm 88.01RE

5 Fr. Instruments for use with 8746.401

Mini-Operating Laparoscope

Instrument Tips	Working Channel Size	WL mm	Catalog #
Grasping forceps, for general use, dual action jaw	5 Fr	385	8746.621
Biopsy forceps, dual action jaw	5 Fr	380	8746.601
Scissors, Metz style, for all purpose cutting, single action jaw	5 Fr	380	8746.651
Blunt probe, for pain mapping and moving various structures	5 Fr	410	8746.701
Knot pusher, for general use	5 Fr	410	8746.801
Needle electrode, flexible	5 Fr	395	824.05
Button electrode, flexible	5 Fr.	395	823.05

3.8 mm Trocars for use with 8746.401

Mini-operating laparoscope

RIWO-ART trocar sleeves with magnetic ball valve	ø mm	WL mm	With Port	Trocar, pyramidal tip
Metal sleeve, standard, straight distal tip	3.8	100	8904.014	8904.123
	3.8	150	8904.016	8904.125

Full Screen Laparoscopes, *5 mm*

HD Compatible

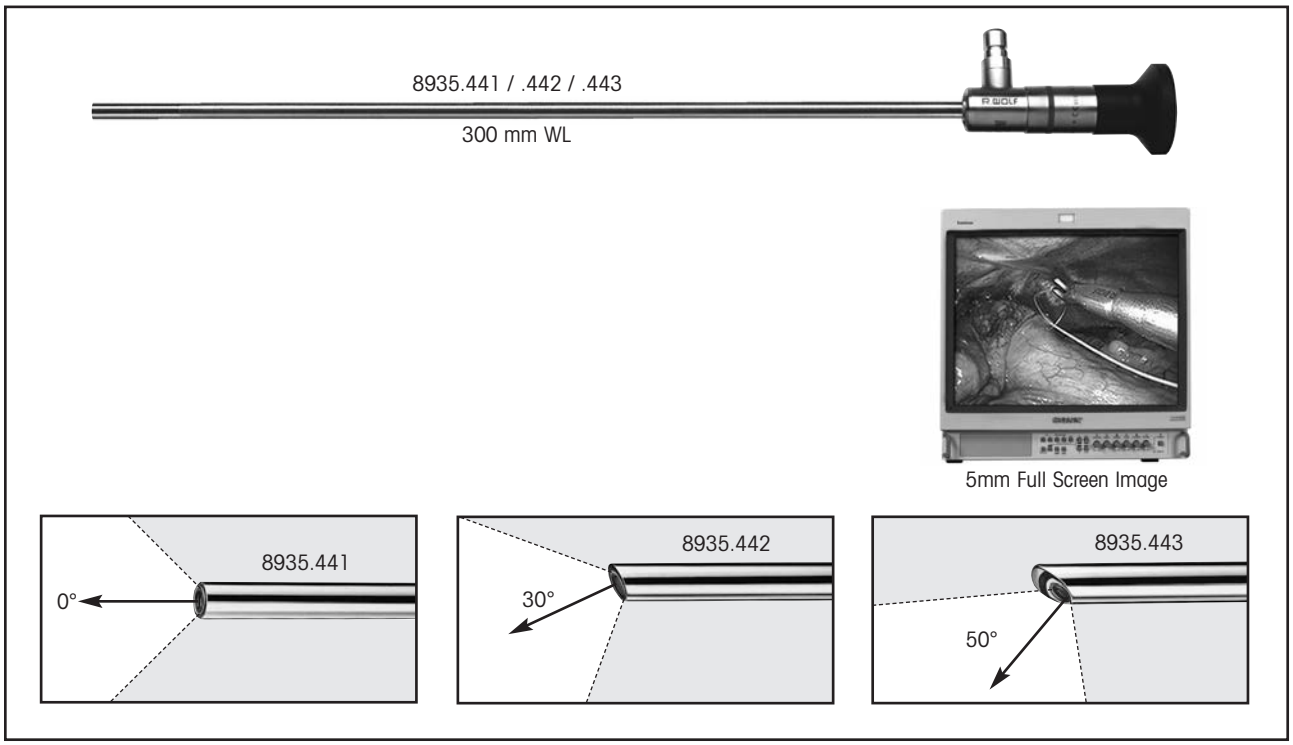

PANOVIEW PLUS laparoscope, Full Screen, 5 mm diameter
featuring distortion-free, full screen image

0°.....8935.441
30°.....8935.442
50°.....8935.443

Fiberoptic light cable,
3.5 mm bundle, 3M WL 8061.0356

Autoclavable
134ºC / 273ºF
Pre-Vac Cycle

Laparoscopes, *7 mm*

HD Compatible

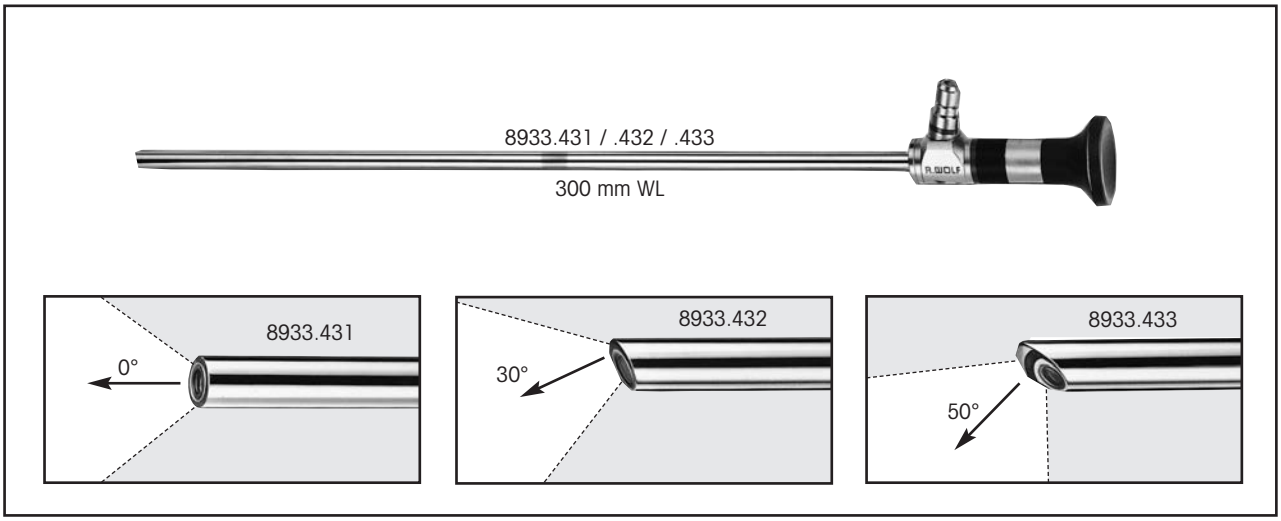

PANOVIEW PLUS laparoscope, 7 mm diameter,
featuring distortion-free optics,
0°.....8933.431
30°.....8933.432
50°.....8933.433

Fiberoptic light cable,
4.5 mm bundle, 3M WL 8061.0456

Autoclavable
134°C / 273°F
Pre-Vac Cycle

Laparoscopes, *10 mm*

HD Compatible

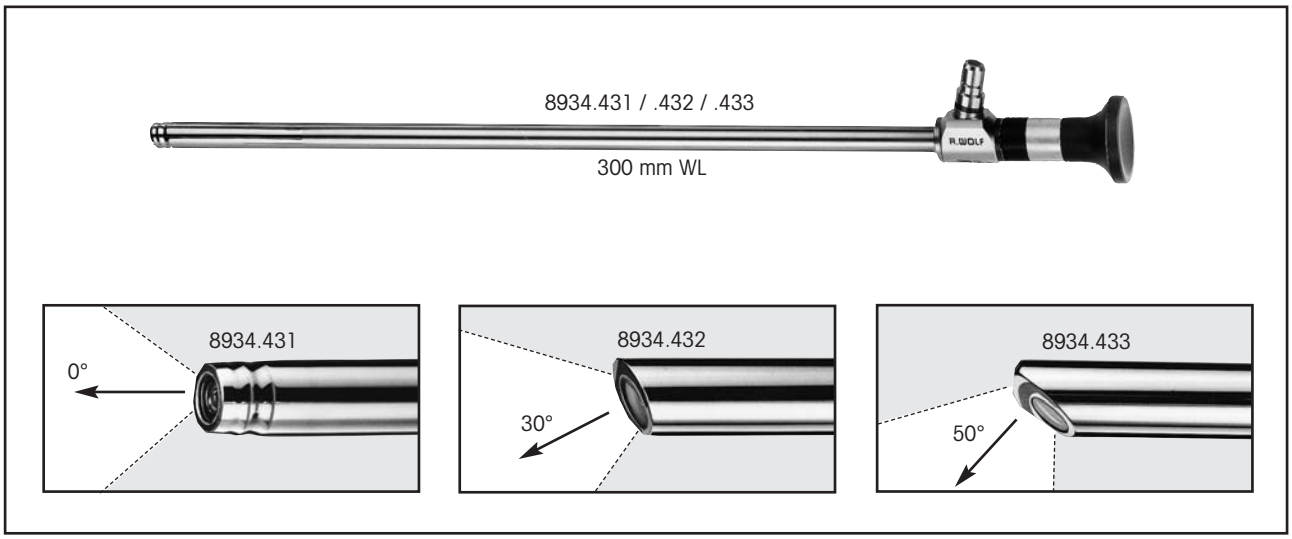

PANOVIEW PLUS laparoscope, 10 mm diameter,
featuring distortion-free optics,

0° 8934.431
30° 8934.432
50° 8934.433

Fiberoptic light cable,
4.5 mm bundle, 3M WL 8061.0456

Autoclavable
134°C / 273°F
Pre-Vac Cycle

Bariatric Laparoscopes, *10 mm*

HD Compatible

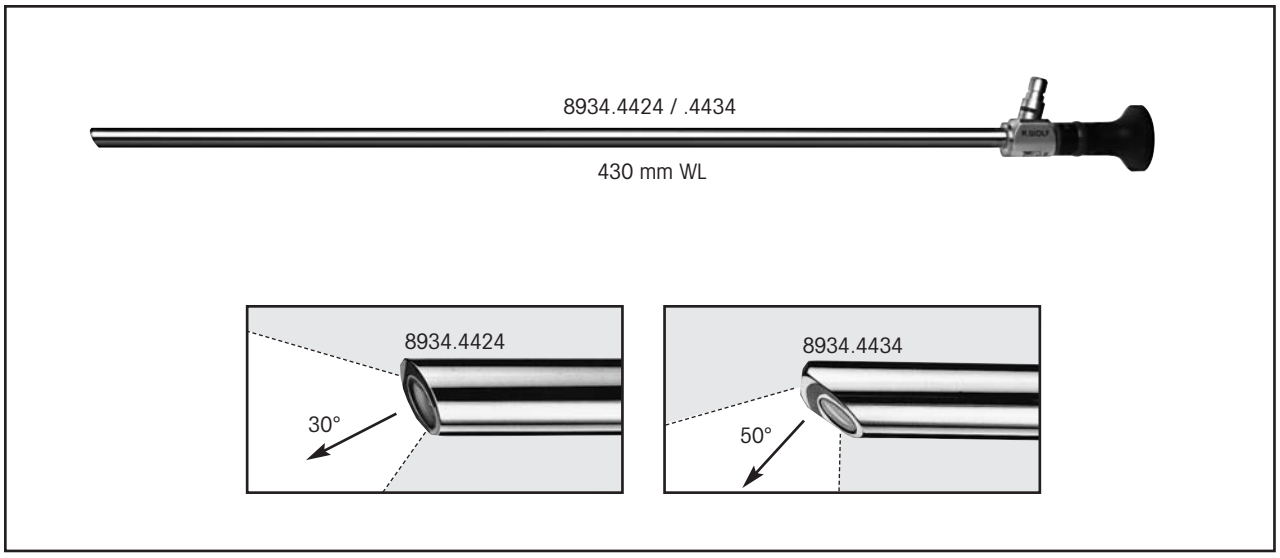

EXTRA LENGTH laparoscope, 10 mm diameter,

30° 8934.4424

50° 8934.4434

Fiberoptic light cable,

4.5 mm bundle, 3M WL 8061.0456

Autoclavable
134°C / 273°F
Pre-Vac Cycle

Operating Laparoscope, *10 mm*

5 mm working channel, 45° offset eyepiece

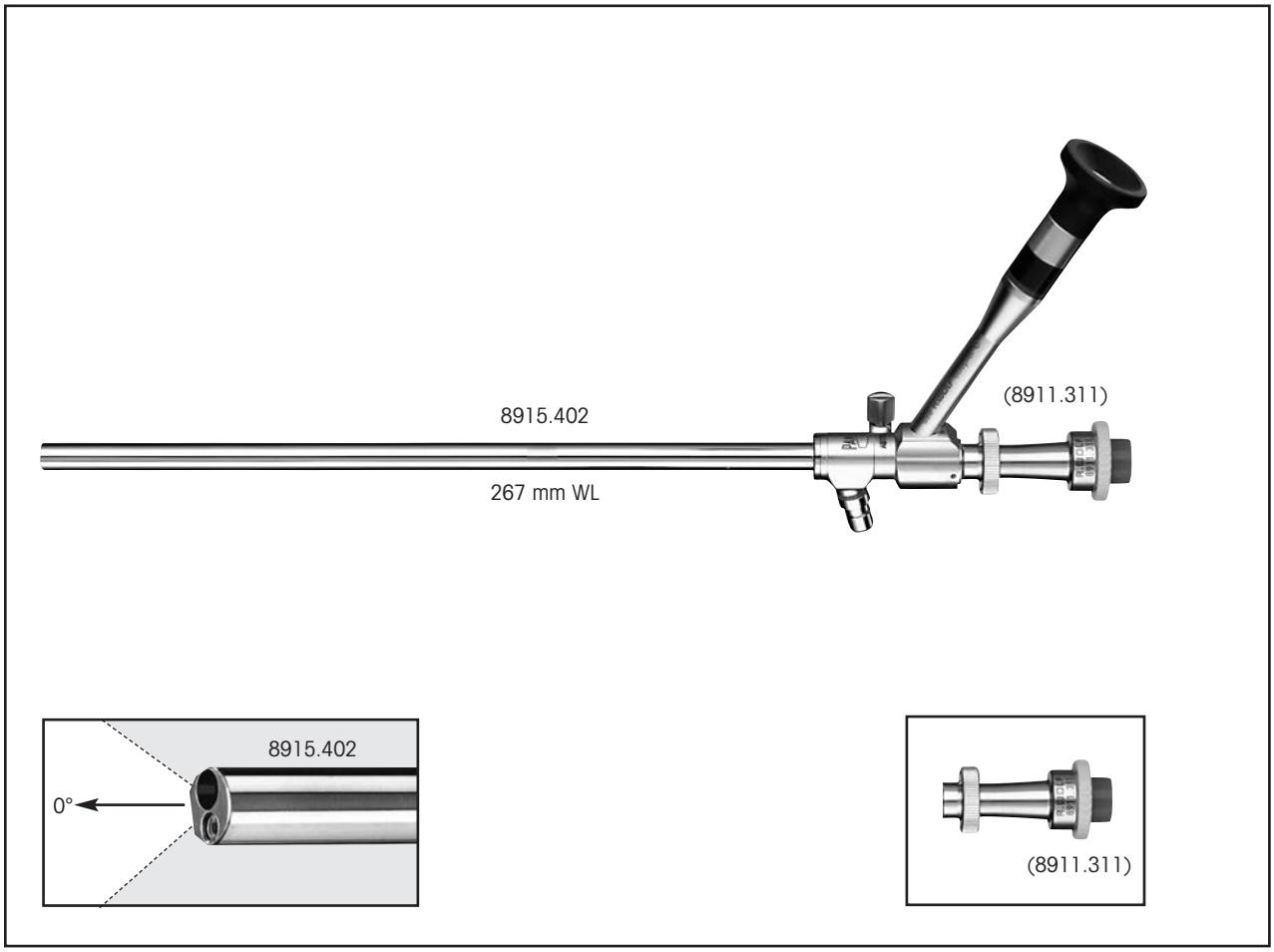

PANOVIEW PLUS operating laparoscope, 10 mm diameter,
with fixed eyepiece,
with obliquely offset eyepiece, 5 mm working channel
with detachable automatic sealing port (8911.311)
0° 8915.402

For automatic sealing valve (8911.311):
Replacement sealing caps,
blue, 12/pkg. 89.02BL
Spare membrane valves,
pack of 10 .....89.103

Optional:
Detachable instrument port with stopcock.....8911.316

Fiberoptic light cable,
3.5 mm bundle, 3M WL 8061.0356

Operating Laparoscope, *10 mm*

5mm working channel, right-angle eyepiece

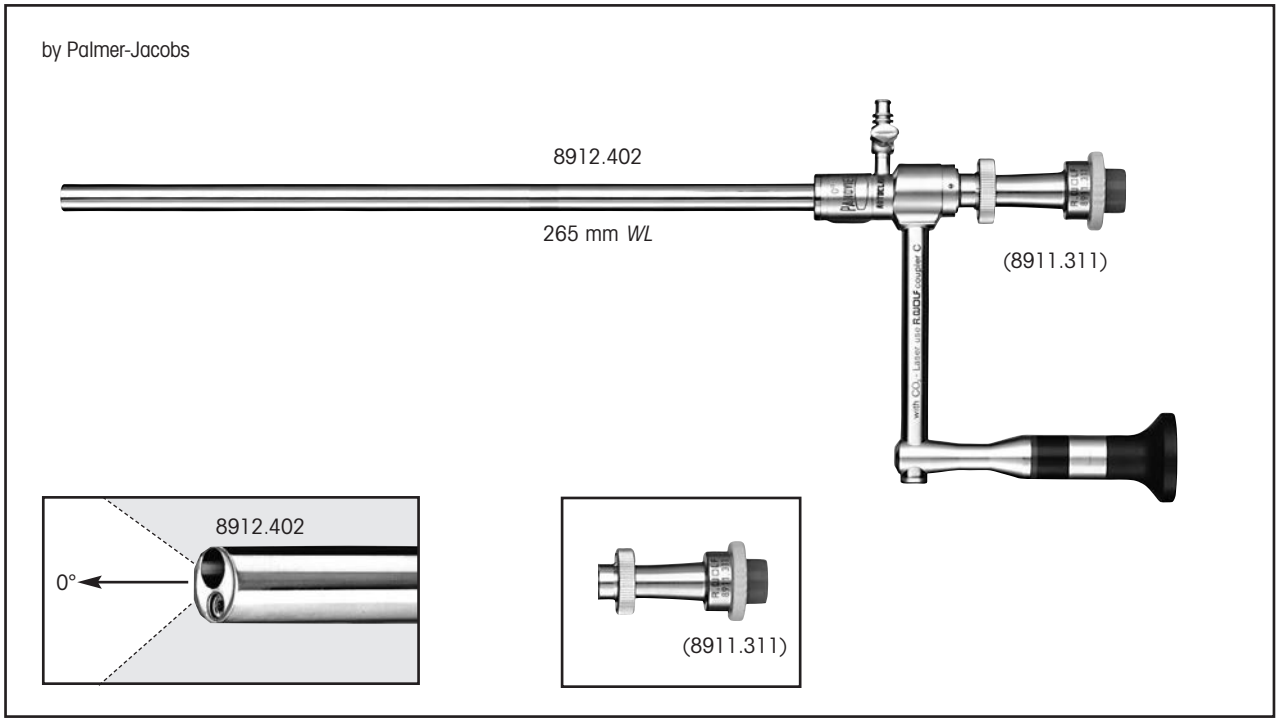

PANOVIEW PLUS operating laparoscope 10 mm diameter,
with right angle eyepiece,
5 mm working channel
with detachable automatic sealing port (8911.311),
0° 8912.402

For automatic sealing valve (8911.311):
Replacement sealing caps,
blue, 12/pkg. 89.02BL
Spare membrane valves,
pack of 10 ..... 89.103
plastic housing for sealing cap 15176.097

Optional:
Detachable instrument port with stopcock 8911.316

Fiber optic light cable,
3.5 mm bundle, 3M WL 8061.0356

Operating Laparoscope, *12.5 mm*

7.3 mm working channel, right-angle eyepiece

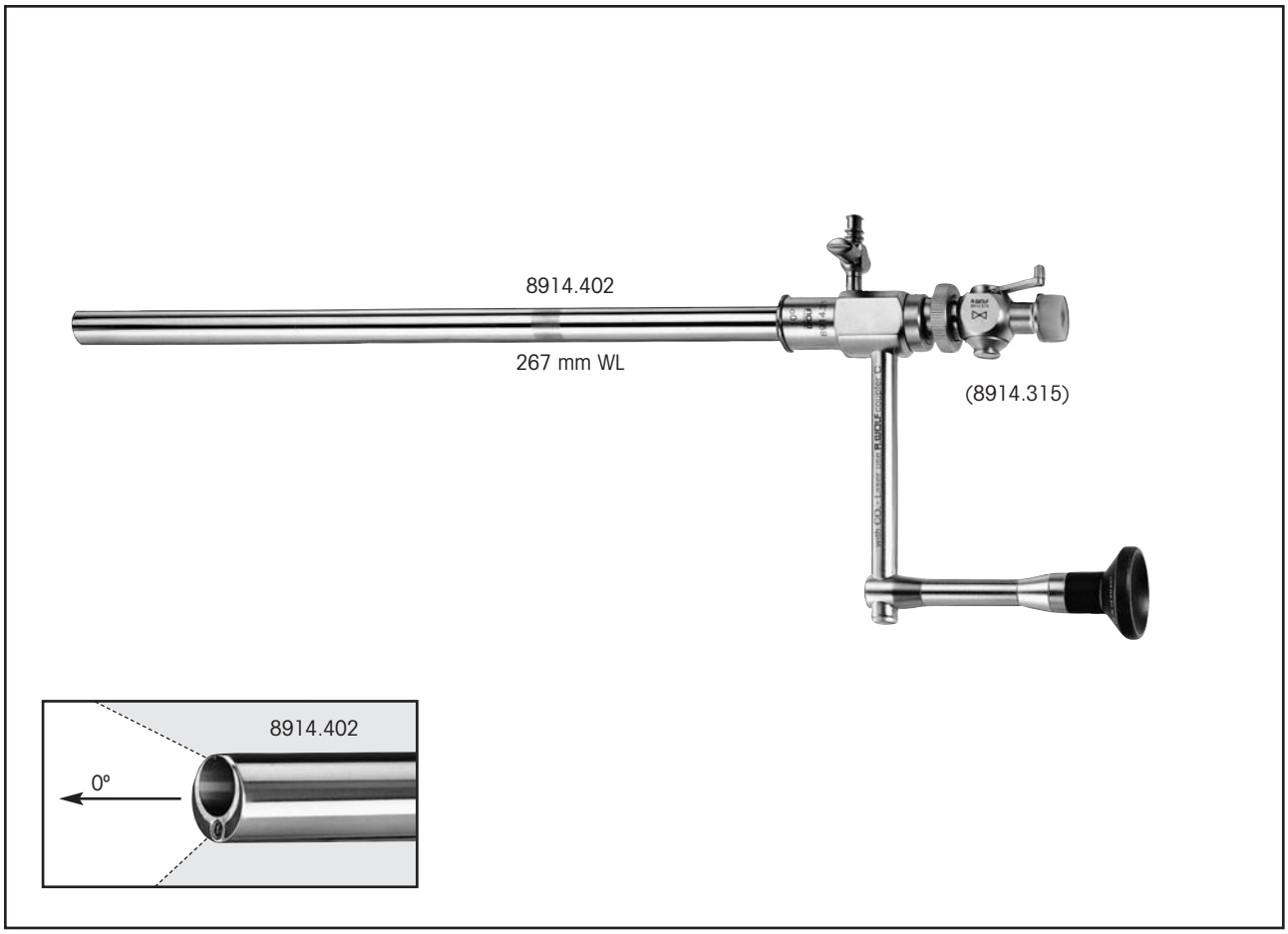

Panoview Plus operating laparoscope, 12.5 mm diameter,
with fixed eyepiece,
7.3 mm working channel, and
detachable stopcock assembly (8914.315)
0° 8914.402

Recommended RIWO-ART Trocar Sleeves 12.5mm,
Metal Sleeve, straight distal tip, 100 mm WL 8924.014
Trocar, pyramidal tip, 100 mm WL 8924.123
Metal sleeve, straight distal tip, 150 mm WL 8924.016
Trocar, pyramidal tip, 150 mm WL 8924.125

Stopcock assembly 8914.315
Sealing caps, yellow, 12/pkg. 89.05YE
Device stop for using the Hulka Clip applicator,
with the 8914.402 ..... 8388.991
Fiberoptic light cable, 3.5 mm bundle, 3M WL 8061.0356

Flexible Choledochoscope, *2.5 mm*

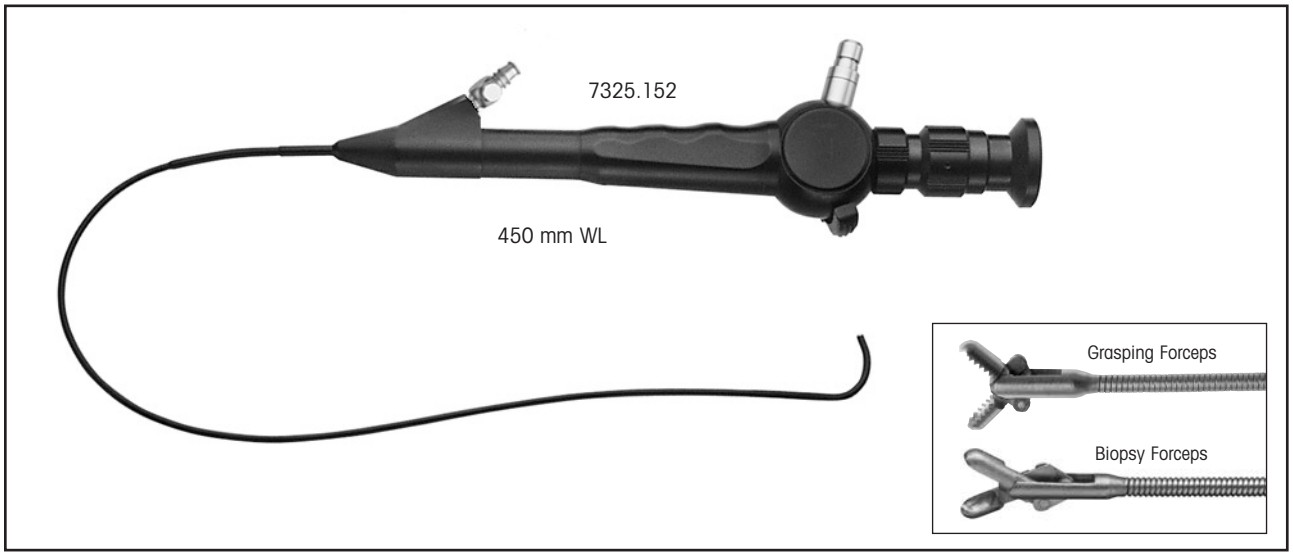

Flexible Choledochoscope, 2.5 mm diameter,
with fixed eyepiece, 1.2 mm (3.6 Fr.) operating channel, including cleaning brush (7321.911), leakage tester (163.903), flexible biopsy forceps (829.601), "T" adapter (7305.781), and case. Logical deflection: 130° up with upward lever movement, 160° down with downward lever movement,
450 mm WL 7325.152

Fiberoptic light cable,
1.6 mm bundle, 1.8 M. 8061.16

Forceps, flexible, 3 fr.
Biopsy, 950 mm WL 829.601
Grasping, 950 mm WL 828.651

Flexible Endoscope Tray
for storage and sterilization
Eto gas only, 22"L x 14"W x 3"D 573.101

Instrumentation

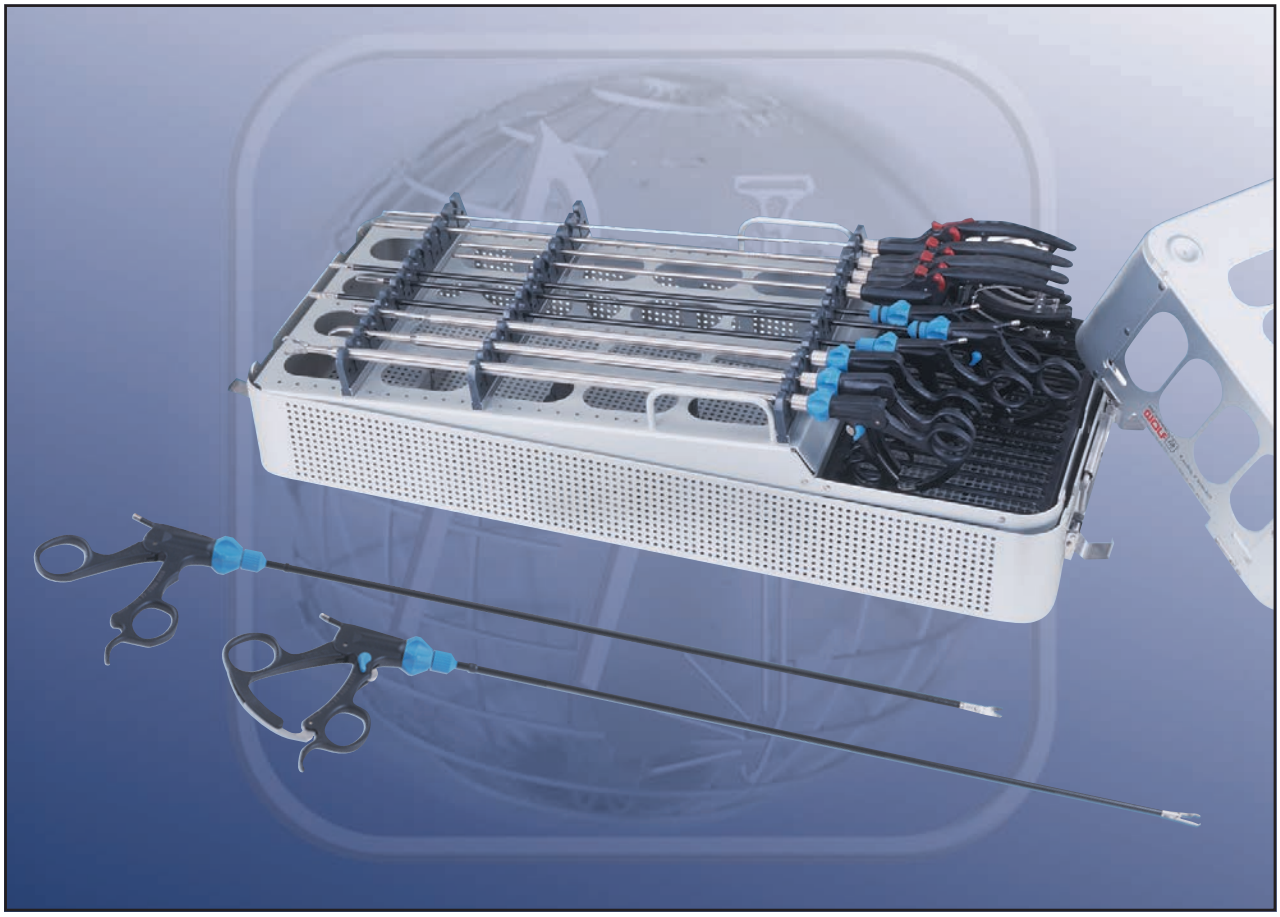

- 2 - 3.5 mm Mini Forceps
- 5 mm Forceps
- 10 mm Forceps
- Bariatric Specialty Instruments
- Needle Holders
- Kleppinger Bipolar Forceps
- PowerBlade Bipolar Forceps
- Eragon Bipolar Forceps
- Electrodes
- Suction / Irrigation
- Cannulas / Probes

Grasping / Biopsy Forceps / Scissors, *2 mm*

Single Piece Design Monopolar

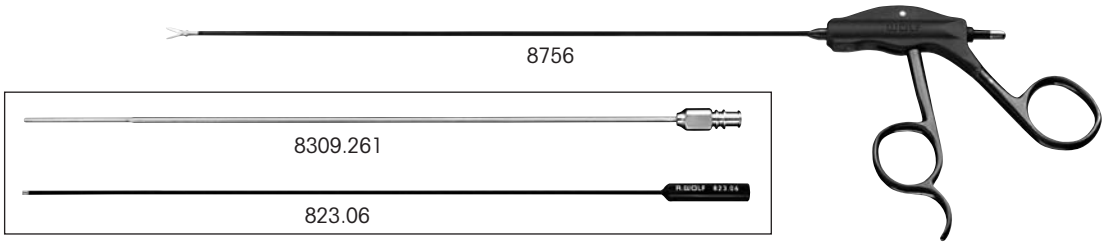

Instrument	Working Length, 240 mm	Type
Scissors, straight, dual action blades	●	**8756.001**
Dissector, straight, dual action jaw	●	**8756.101**
Atraumatic grasping forceps, dual action	●	**8756.111**
Universal grasping forceps, dual action	●	**8756.121**
Biopsy punch, single action jaw	●	**8756.011**
Biopsy punch, w/ sharp tip, single action	●	**8756.012**
Liver biopsy cannula, 2 mm 1.6 mm tip section	●	**8309.261**
Coagulation button electrode, 2 mm, monopolar	●	**823.06**

HF connecting cables:,

Wolf to Wolf, 10 ft., Reusable 8106.132
Wolf to Wolf, 10 ft., Disposable, sterile, 10 / pkg 4106.1320

HF connecting cables:,

Wolf to Valleylab, 10 ft., Reusable 8106.033
Wolf to Valleylab, 10 ft., Disposable, sterile, 10/pkg 4106.0330

Grasping / Dissecting Forceps / Scissors, *3.5 mm*

Modular Design Monopolar

Jaw insert	Sheath tube, insulated			Handle type*		Complete instrument
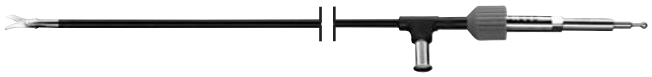		WL 240mm	WL 310mm	without ratchet rotatable	with ratchet rotatable	
	Part Number			8393.0003	8393.0004	
Scissors, "Metzenbaum", curved left, double action	8390.006	●		●		**8390.0063**
	8391.006		●	●		**8391.0063**
Grasping and Dissecting forceps curved left - "Maryland" dissector, double action	8390.205	●			●	**8390.2054**
	8391.205		●		●	**8391.2054**
Atraumatic grasping forceps, double action	8390.204	●			●	**8390.2044**
	8391.204		●		●	**8391.2044**
Universal grasping forceps, double action	8390.254	●			●	**8390.2544**
	8391.254		●		●	**8391.2544**
Babcock grasping forceps, double action	8390.255	●			●	**8390.2554**
	8391.255		●		●	**8391.2554**
Biopsy forceps, spoon-shaped, double action	8391.406		●	●		**8391.4063**
Punch biopsy forceps, single action	8391.405		●	●		**8391.4053**
Scissors, hook, single action	8391.014		●	●		**8391.0143**

Rinsing connector locking cap,
for Luer port, 3mm 887.00

*Instruments may also be ordered with
axial handle monopolar 8393.0005

The Richard Wolf "Grip" Line is designed for total flexibility and interchangeability of jaw inserts.
Instruments may be ordered complete or assembled from components purchased individually.

Grasping / Dissecting Forceps, *5 mm*

Modular Design modu line

Jaw insert		*Sheath tube, insulated*			*Handle type*		**Complete instrument** • Jaw insert • Sheath tube • Handle
					HF mono	HF mono	
		WL 240 mm	*WL* 310 mm	*WL* 430 mm	*without ratchet, rotatable*	*with ratchet, rotatable*	
	Part Number	8392.913	8393.913	8394.913	8393.0003	8393.0004	
Grasping and dissecting forceps, *"Maryland dissector", curved with fine horizontal serration, double jaw action*	8392.281	●			●		**8392.2813**
	8393.281		●		●		**8393.2813**
	8394.281			●	●		**8394.2813**
Grasping and dissecting forceps, *fine pyramidal-shaped teeth, tapered, 18 mm, double jaw action*	8393.289		●			●	**8393.2894**
Grasping and coagulation forceps, *distal horizontal serrations with cup, double jaw action*	8393.287		●		●		**8393.2873**
Grasping and dissecting forceps, *fine horizontal serrations, fenestrated, double jaw action*	8393.183		●		●		**8393.1833**

Grasping / Dissecting Forceps, *5 mm*

Modular Design modu line

Jaw insert		*Sheath tube, insulated*			*Handle type*			**Complete instrument** • Jaw insert • Sheath tube • Handle
		WL 240 mm	*WL* 310 mm	*WL* 430 mm	*with ratchet rotatable*	HF mono *without ratchet rotatable*	HF mono *with ratchet rotatable*	
	Part Number	8392.913	8393.913	8394.913	8393.0002	8393.0003	8393.0004	
Atraumatic grasping forceps, *fenestrated with horizontal serrations, double jaw action*	8392.181	●					●	**8392.1814**
	8393.181		●				●	**8393.1814**
	8394.181			●			●	**8394.1814**
Grasping forceps "Babcock", *grasping surface with fine horizontal serration, double jaw action*	8392.186	●			●			**8392.1862**
	8393.186		●		●			**8393.1862**
	8394.186			●	●			**8394.1862**
Atraumatic grasping forceps, *smooth, double jaw action*	8393.195		●			●		**8393.1953**
	8394.195			●		●		**8394.1953**
Grasping and dissecting forceps, *fine pyramidal-shaped teeth, tapered, 14 mm, double jaw action*	8393.288		●				●	**8393.2884**

Grasping / Dissecting Forceps, *5 mm*

Modular Design modu line

Jaw insert		*Sheath tube, insulated*		*Handle type*		**Complete instrument** • Jaw insert • Sheath tube • Handle
		WL 310 mm	*WL* 430 mm	*with ratchet, rotatable*	*without ratchet, rotatable*	
	Part Number	8393.913	8394.913	8393.0002	8393.0003	
Grasping and dissecting forceps "Dolphin", *fine horizontal serration with jaw cup, tapered, 15 mm long, double jaw action*	8393.285	●			●	**8393.2853**
Grasping forceps "ALLIS", *fine distal horizontal serrations, tapered, 30 mm, double jaw action*	8393.484	●		●		**8393.4842**
	8394.484		●	●		**8394.4842**
Grasping and extraction forceps, *2x3 claws, 30 mm, single jaw action*	8393.488	●		●		**8393.4882**
Grasping forceps wih two teeth, *wavy grasping surface, single jaw action*	8393.489	●		●		**8393.4892**
	8394.489		●	●		**8394.4892**
Grasping forceps wih two teeth, *wavy grasping surface, double jaw action*	8393.490	●		●		**8393.4902**
	8394.490		●	●		**8394.4902**

Grasping / Dissecting Forceps, *5 mm*

Modular Design modu line

Jaw insert		*Sheath tube, insulated*		*Handle type*		**Complete instrument** • Jaw insert • Sheath tube • Handle
		WL 310 mm	*WL* 430 mm	*with ratchet, rotatable*	HF mono *with ratchet, rotatable*	
	Part Number	8393.913	8394.913	8393.0002	8393.0004	
Universal grasping forceps, *pyramidal-shaped teeth and horizontal serrations, 15 mm, double jaw action*	8393.481	●			●	**8393.4814**
Universal grasping forceps, *pyramidal-shaped teeth and horizontal serrations, 25 mm, double jaw action*	8393.482	●		●		**8393.4822**
	8394.482		●	●		**8394.4822**
Plate-shaped grasping forceps, *fenestrated with horizontal serration, double jaw action*	8393.182	●			●	**8393.1824**
Grasping and dissecting forceps, *fenestrated, fine horizontal serrations, 20 mm long, single jaw action*	8393.184	●			●	**8393.1844**
	8394.184		●		●	**8394.1844**
Grasping and dissecting forceps, *fenestrated, fine horizontal serrations, 15 mm long, single jaw action*	8393.185	●			●	**8393.1854**

Grasping / Dissecting Forceps, *5 mm*

Modular Design modu line

Jaw insert		*Sheath tube, insulated*	*Handle type*	**Complete instrument** • Jaw insert • Sheath tube • Handle
		WL 310 mm	HF mono *with ratchet rotatable*	
	Part Number	8393.913	8393.0004	
Grasping and dissecting forceps, "Mixter", *angled, fine pyramidal-shaped teeth, double jaw action*	8393.283	●	●	**8393.2834**
Dissecting forceps "Petelin", *angled 30° left, with horizontal serration, single jaw action*	8393.282	●	●	**8393.2824**

Grasping Forceps, *5 mm*

Modular Design modu line

Jaw insert		Sheath tube, insulated			Handle type		Complete instrument • Jaw insert • Sheath tube • Handle
		WL 240 mm	WL 310 mm	WL 430 mm	with ratchet rotatable	HF mono with ratchet rotatable	
	Part Number	8392.913	8393.913	8394.913	8393.0002	8393.0004	
Grasping forceps, "Babcock", *large distal grasping surface with fine horizontal serration, double jaw action*	8392.187	●			●		**8392.1872**
	8393.187		●		●		**8393.1872**
	8394.187			●	●		**8394.1872**
Atraumatic grasping forceps, *jaw hollow with wavy teeth border, 20 mm, single jaw action*	8393.292		●		●		**8393.2922**
	8394.292			●	●		**8394.2922**
Atraumatic grasping forceps, *jaw hollow with wavy teeth border, 20 mm, double jaw action*	8393.293		●		●		**8393.2932**
	8394.293			●	●		**8394.2932**
Grasping and extraction forceps, *"pike mouth", double jaw action*	8393.483		●			●	**8393.4834**
Claw grasping forceps, *double jaw action*	8393.494		●		●		**8393.4942**

Grasping Forceps, *5 mm*

Modular Design modu line

Jaw insert		*Sheath tube, insulated*		*Handle type* HF mono	**Complete instrument** • Jaw insert • Sheath tube • Handle
		WL 310 mm	*WL* 430 mm	*with ratchet rotatable*	
	Part Number	8393.913	8394.913	8393.0004	
Grasping forceps with teeth, *double jaw action*	8393.485	●		●	**8393.4854**
Grasping forceps with one tooth, *fine horizontal serrations, tapered, double jaw action*	8393.486	●		●	**8393.4864**
Grasping forceps with two teeth, *fine horizontal serrations, single jaw action*	8393.487	●		●	**8393.4874**
	8394.487		●	●	**8394.4874**
Atraumatic grasping forceps for fine structures, *double jaw action*	8393.196	●		●	**8393.1964**
	8394.196		●	●	**8394.1964**

Handle Styles

for modular forceps

Handle style	*rotatable*	*non-rotatable*	*with ratchet*	*without ratchet*	*with HF*	*without HF*	*Type*
	●			●		●	**8393.0001**
	●		●			●	**8393.0002**
	●			●	●		**8393.0003**
	●		●		●		**8393.0004**
		●	●			●	**8393.0008**
		●	●		●		**8393.0009**
axial handle		●	●			●	**8393.941**
		●	●		●		**8393.0005**

Biopsy Forceps, *5 mm*

Modular Design modu line

Jaw insert		*Sheath tube, insulated*		*Handle type*	**Complete instrument** • Jaw insert • Sheath tube • Handle
				HF mono	
		WL 310 mm	*WL* 430 mm	*without ratchet rotatable*	
	Part Number	8393.913	8394.913	8393.0003	
Biopsy forceps, *spiked, double jaw action*	8393.091	●		●	**8393.0913**
	8394.091		●	●	**8394.0913**
Biopsy forceps, *cutting, single jaw action*	8393.092	●		●	**8393.0923**
	8394.092		●	●	**8394.0923**
Hook punch by Frangenheim, *cutting, single jaw action*	8393.082	●		●	**8393.0823**
	8394.082		●	●	**8394.0823**
Biopsy forceps, *pointed spoon forceps, single jaw action*	8393.093	●		●	**8393.0933**
	8394.093		●	●	**8394.0933**

Scissors, *5 mm*

Modular Design modu line

Jaw insert		*Sheath tube, insulated*			*Handle type* HF mono	**Complete instrument** • Jaw insert • Sheath tube • Handle
		WL 240 mm	*WL* 310 mm	*WL* 430 mm	*without ratchet rotatable*	
	Part Number	8392.913	8393.913	8394.913	8393.0003	
Scissors, "Metzenbaum", *curved left, double jaw action*	8392.041	●			●	**8392.0413**
	8393.041		●		●	**8393.0413**
	8394.041			●	●	**8394.0413**
Scissors, *straight, tapered, double jaw action*	8392.045	●			●	**8392.0453**
	8393.045		●		●	**8393.0453**
	8394.045			●	●	**8394.0453**
Hooked scissors, *serrated, single jaw action*	8393.081		●		●	**8393.0813**
	8394.081			●	●	**8394.0813**
Micro-scissor, "Metzenbaum", *left curved, double jaw action*	8393.044		●		●	**8393.0443**

Grasping / Dissecting Forceps, *5 mm*

Single Piece Design

Rotating handle with flush port			Handle type	Handle type	***Complete instrument*** • *Integrated jaw insert, sheath and handle*
Instrument	WL 310 mm	WL 430 mm	Rotatable with Ratchet	HF Post • Rotatable with Ratchet	Product Code
Wave Side Grasper, single action jaw	●		●		**8393.2927**
		●	●		**8394.2927**
Wave Side Grasper, double action jaw	●		●		**8393.2937**
		●	●		**8394.2937**
Retraction Grasper with 2 Teeth	●		●		**8393.4897**
		●	●		**8394.4897**
Atraumatic Bowel Grasper	●		●		**8393.4947**
		●	●		**8394.4947**
Universal Grasper	●			●	**8393.2549**
"Mixter" Grasping Dissector	●			●	**8393.4149**
Alligator Grasper	●			●	**8393.4159**
Grasper for Fine Structures	●			●	**8393.2659**
		●		●	**8394.2659**

HF connecting cables:,

Wolf to Wolf, 10 ft., Reusable 8106.132

Wolf to Wolf, 10 ft., Disposable, sterile, 10 / pkg 4106.1320

HF connecting cables:,

Wolf to Valleylab, 10 ft., Reusable 8106.033

Wolf to Valleylab, 10 ft., Disposable, sterile, 10/pkg 4106.0330

Replacement caps for flush port,

pkg of 10 .....88.944

Grasping / Dissecting Forceps, *5 mm*

Single Piece Design

Rotating handle with flush port			Handle type	Handle type	***Complete instrument*** • *Integrated jaw insert, sheath and handle*
Instrument	WL 310 mm	WL 430 mm	Rotatable with Ratchet	HF Post • Rotatable with Ratchet	Product Code
Babcock Grasping Forceps, double action jaw	●		●		**8393.3257**
Atraumatic Paddle Babcock, double action jaw	●		●		**8393.3267**
		●	●		**8394.3267**
Debakey Grasper, 30 mm jaw length	●		●		**8393.3227**
		●	●		**8394.3227**
Debakey Grasper, 28 mm jaw length, curved	●		●		**8393.3237**
		●	●		**8394.3237**
Debakey Grasper, 40 mm jaw length	●		●		**8393.3247**
		●	●		**8394.3247**
Bullet Nose Grasper, double action jaw	●			●	**8393.2349**
Atraumatic Fenestrated Grasper	●			●	**8393.2049**
Gastric Band Manipulator / Esophageal Dissector	**340mm**		●		**8393.6557**

HF connecting cables:,

Wolf to Wolf, 10 ft., Reusable 8106.132

Wolf to Wolf, 10 ft., Disposable, sterile, 10 / pkg 4106.1320

HF connecting cables:,

Wolf to Valleylab, 10 ft., Reusable 8106.033

Wolf to Valleylab, 10 ft., Disposable, sterile, 10/pkg 4106.0330

Replacement caps for flush port,

pkg of 10 .....88.944

Grasping / Dissecting Forceps, *5 mm*

Single Piece Design

Rotating handle with flush port			Handle type	Handle type	***Complete instrument*** • *Integrated jaw insert, sheath and handle*
Instrument	WL 310 mm	WL 430 mm	HF Post • Rotatable without Ratchet	HF Post • Rotatable with Ratchet	Product Code
Grasping & Dissecting Forcep	●		●		**8393.2418**
Maryland Dissector with straight serrations	●		●		**8393.2058**
		●	●		**8394.2058**
Maryland Dissector with cross serrations	●		●		**8393.2958**
		●	●		**8394.2958**
Dolphin Nose Dissector	●		●		**8393.4628**
		●	●		**8394.4628**
Long Nose Dissector, 22mm jaw	●		●		**8393.2298**
Atraumatic Tubal Grasper	●		●		**8393.2178**
Grasper with Wave Serrations	●		●		**8393.2468**
Atraumatic Grasper, with cup	●		●		**8393.2368**
	●			●	**8393.2369**
Atraumatic Grasper, without cup	●		●		**8393.2268**
	●			●	**8393.2269**
		●	●		**8394.2268**
Petelin Dissector	●		●		**8393.2148**

Biopsy Forceps / Scissors, *5 mm*

Single Piece Design

Rotating handle with flush port			Handle type	***Complete instrument*** • *Integrated jaw insert, sheath and handle*
Instrument	WL 310 mm	WL 430 mm	HF Post • Rotatable without Ratchet	Product Code
Hook punch by Frangenheim, cutting action, single action jaw	●		●	**8393.0168**
Biopsy Forceps, spiked, double action	●		●	**8393.4048**
Metzenbaum Scissors	●		●	**8393.0248**
		●	●	**8394.0248**
Hook Scissors	●		●	**8393.0068**
		●	●	**8394.0068**

HF connecting cables:,

Wolf to Wolf, 10 ft., Reusable 8106.132

Wolf to Wolf, 10 ft., Disposable, sterile, 10 / pkg 4106.1320

HF connecting cables:,

Wolf to Valleylab, 10 ft., Reusable 8106.033

Wolf to Valleylab, 10 ft., Disposable, sterile, 10/pkg 4106.0330

Replacement caps for flush port,

pkg of 10 .....88.944

Grasping Forceps, *5 mm*

Single Piece Design Slide-ratchet handle

Instrument	310 mm WL	Non-Rotatable	Rotatable
Wave Side Grasper, single action jaw	●	**8383.2927**	**8383.2925**
Wave Side Grasper, double action jaw	●	**8383.2937**	**8383.2935**
Retraction Grasper with two teeth	●	**8383.4897**	**8383.4895**

Ergonomic handle with slide-ratchet for secure positioning of the jaw tip

Grasping Forceps, *5 mm*

Single Piece Design Monopolar

Handle with cleaning channel and flip-away ratchet mechanism

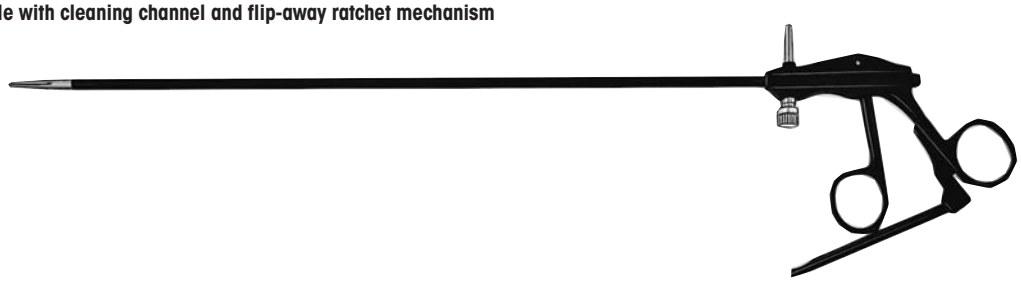

Instrument	315 mm WL	Type
Grasping forceps, short, cupped, double action jaw	●	**8383.127**

HF connecting cables:,

Wolf to Wolf, 10 ft., Reusable 8106.132

Wolf to Wolf, 10 ft., Disposable, sterile, 10 / pkg 4106.1320

HF connecting cables:,

Wolf to Valleylab, 10 ft., Reusable 8106.033

Wolf to Valleylab, 10 ft., Disposable, sterile, 10/pkg 4106.0330

Grasping / Biopsy Forceps / Scissors, *5 mm*

Single Piece Design Monopolar

Handle with cleaning channel and extended finger spur

Instrument	320 mm WL	450 mm WL	Type
Grasping forceps, atraumatic, blunt, double action jaws	●		**8383.036**
Biopsy forceps with double-spoon jaws and spikes	●		**8383.101**
Biopsy forceps, single cutting action	●		**8383.124**
Biopsy forceps, hook punch, single cutting action	●		**8383.131**
		●	**8384.131**
Grasping forceps, serrated, fenestrated, double action jaws	●		**8383.037**
Hooked scissors, serrated, single action blade	●		**8383.026**
		●	**8384.022**

Grasping Forceps, *5 mm*

Single Piece Design Monopolar

with spring handle

Instrument	320 mm WL	450 mm WL	Type
Grasping forceps, fenestrated, atraumatic	●		**8383.141**
		●	**8384.141**
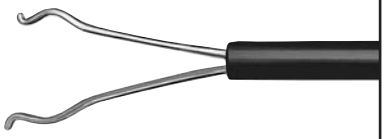 **Grasping forceps,** atraumatic	●		**8383.142**
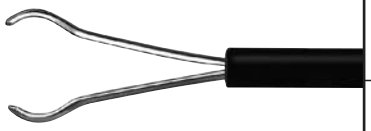 **Grasping forceps,** atraumatic, for fine structures	●		**8383.14**
		●	**8384.14**

HF connecting cables:,

Wolf to Wolf, 10 ft., Reusable 8106.132

Wolf to Wolf, 10 ft., Disposable, sterile, 10 / pkg 4106.1320

HF connecting cables:,

Wolf to Valleylab, 10 ft., Reusable 8106.033

Wolf to Valleylab, 10 ft., Disposable, sterile, 10/pkg 4106.0330

Grasping Forceps, *5 mm*

Single Piece Design

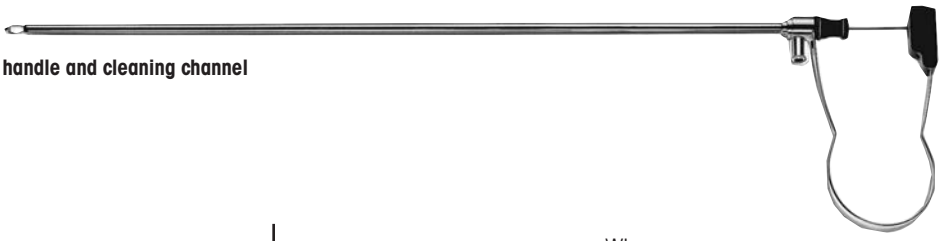

with spring handle and cleaning channel

Instrument	WL	Type
Atraumatic forceps with grooved plates	310 mm	**8383.41**

Grasping / Biopsy Forceps, *5 mm*

Single Piece Design

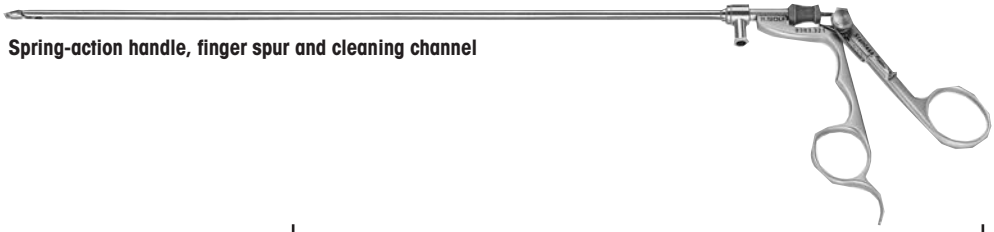

Spring-action handle, finger spur and cleaning channel

Instrument	WL	Type
Biopsy forceps, with spikes, single action jaw	315 mm	**8383.471**

Ratcheted locking handle

Instrument	WL	Type
Grasping forceps, alligator, double action jaw	315 mm	**8383.08**

Scissors, *5 mm*

Single Piece Design

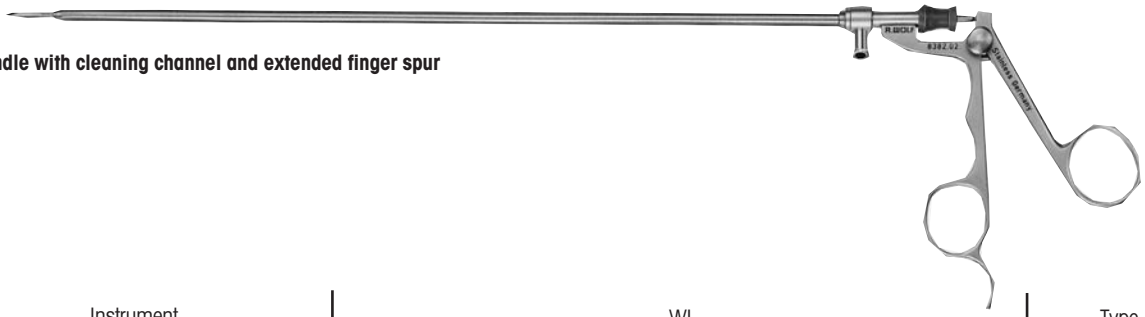

Handle with cleaning channel and extended finger spur

Instrument	WL	Type
Micro scissors, single action blade	310 mm	**8382.02**
Sawtooth scissors, straight, blunt, single action blade	320 mm	**8383.46**

Grasping / Dissecting Forceps, *5 mm*

Single Piece Design

Spring-action handle, extended finger spur and cleaning channel

Instrument	WL	Type
Dissecting forceps by Petelin, spring-assisted closing action, angled 30° left, single action jaw	315 mm	**8383.581**
Dissecting forceps by Petelin, spring-assisted closing action, angled 60° left, single action jaw	315 mm	**8383.582**
Grasping/Dissecting forceps, curved left, single action jaw Handle without spring action	315 mm	**8383.571**
	Required for use with the instruments listed above: **Introducing sleeve 5 / 10 mm** with sealing cap (89.02 BL)	**8934.981**

Grasping / Dissecting Forceps, *10 mm*

Modular Design

Jaw insert	Sheath tube, non-insulated	Handle type*	Complete instrument
	WL 310mm	with ratchet rotatable, no HF	
Part Number	8395.901	8393.0002	
Grasping forceps, 2/3 claws single action	8395.204	●	●	**8395.2042**
Atraumatic grasping forceps, "Babcock", double action	8395.214	●	●	**8395.2142**
Atraumatic bowel grasping forceps, single action	8395.215	●	●	**8395.2152**
Universal grasping forceps, double action	8395.224	●	●	**8395.2242**
Atraumatic plate-shaped grasping forceps, double action	8395.234	●	●	**8395.2342**
Grasping forceps by Debakey, double action	8395.235	●	●	**8395.2352**
Grasping forceps with alligator jaws, double action	8395.236	●	●	**8395.2362**
Grasping and dissecting forceps, "Maryland", double action	8395.225	●	●	**8395.2252**

*Instruments may also be ordered with axial handle 8393.941

Grasping / Dissecting Forceps, *10 mm*

Modular Design

Jaw insert	Sheath tube, non-insulated	Handle type	Complete instrument
	WL 310mm	with ratchet, rotatable, no HF	
Part Number	8395.901	8393.0002	
Dissecting forceps, right angled, double action	8395.226	●	●	**8395.2262**
Grasping forceps, spoon-shaped, single action	8395.244	●	●	**8395.2442**
Grasping and manipulation forceps, double action	8395.504*	●	●	**8395.5042**

* Only for use through the 15mm trocar sleeves or 10mm flexible trocar sleeves

Specialty Forceps, Extended Length, *10 mm*

Modular Design

Jaw insert	Sheath tube, non-insulated	Handle Type	Complete instrument
	WL 370mm	with ratchet, rotatable, no HF	
Part Number	8397.901	8393.0002	
Articulating dissector	8397.654S01	●	●	**8397.6542 S01**
Anvil grasper for circular stapler	8397.655	●	●	**8397.6552**

Scissors, *10 mm*

Modular Design

Jaw insert		Sheath tube, non-insulated	Handle type	Complete instrument
		WL 310mm	without ratchet, rotatable, no HF	
	Part Number	8395.901	8393.0001	
Scissors, curved left, double action	8395.005	●	●	**8395.0051**

Grasping / Dissecting Forceps, *10 mm*

Single Piece Design

Rotating handle with flush port		Handle type	***Complete instrument*** • *Integrated jaw insert, sheath and handle*
Instrument	WL 310 mm	Rotatable Ratcheted, no HF	Product Code
Grasping Forceps, spoon shape	●	●	**8395.2447**
2/3 Claw Forceps, single action	●	●	**8395.2047**
Babcock Grasper, double action	●	●	**8395.2147**
Dissecting Forceps, right angled	●	●	**8395.2267**
Tenaculum Grasping Forceps	●	●	**8395.2367**
Babcock Grasper with Serrated Pad	●	●	**8395.2247**

Grasping Forceps, *10 mm*

Single Piece Design

Spring-action handle, extended finger spur with cleaning channel

Instrument	WL	Type
Grasping forceps, 2/3 pronged, single action jaw	335 mm	**8385.10**
Grasping forceps, spoon-shaped, single action jaw	335 mm	**8385.12**
Alligator grasping and extraction forceps, single action jaw	335 mm	**8385.13**

Bariatric Specialty Instruments

Modular Design

Jaw insert	Sheath tube, uninsulated			Handle Type	Complete instrument
			WL 370mm	with ratchet, rotatable, no HF	
	Part Number	OD	8397.901	8393.0002	
Anvil grasper for circular stapler	8397.655	10 mm	●	●	**8397.6552**
Gastric Band Manipulator/ Esophageal Dissector	8397.654S01	10 mm	●	●	**8397.6542 S01**

Single Piece Design

Rotating handle with cleaning channel			Handle type	***Complete instrument*** *• Jaw insert • Sheath tube • Handle*
Instrument	OD	WL	Rotatable with Ratchet	Type
Gastric Band Manipulator	5 mm	340 mm	●	**8393.6557**

Gastric Band Introducer by Ponce			
Instrument	OD	WL	Product Code
Gastric Band Introducer	8 mm	330 mm	**8397.6557**

Bariatric Specialty Instruments

Instrument	OD	Product Code
Fisher Liver Retractor	5 mm	**8383.6917**

Scope/Retractor Holder,
for stabilizing scopes and instruments
from 5mm to 12mm in diameter **8175.601**

Needle Holders, *3.5 mm / 5 mm / 10 mm*

Modular Design

Inner section with sheath tube and irrigation tap					Handle Type	***Complete instrument*** *• Jaw insert • Sheath tube • Handle*
		Ø	WL 340mm	WL 430mm	axial handle	
Instrument	Type				8393.941	Type
Needle holder, straight with carbide insert, single action	8391.504	3.5mm	●		●	**8391.501**
Needle holder, straight, serrated, single action	8393.504	5mm	●		●	**8393.501**
Needle holder, straight with carbide insert, single action	8393.505	5mm	●		●	**8393.502**
	8394.505	5mm		●	●	**8394.502**
Needle holder, curved right with carbide insert, single action	8393.514	5mm	●		●	**8393.511**
	8394.514	5mm		●	●	**8394.511**
Needle holder, curved left with carbide insert, single action	8393.515	5mm	●		●	**8393.512**
	8394.515	5mm		●	●	**8394.512**
Multifunction needle holder by Sarbu* single action	8393.506	5mm	●		●	**8393.503**
	8394.506	5mm		●	●	**8394.503**
Needle holder, straight with carbide insert, single action	8395.524	10mm	●		●	**8395.521**

*with automatic needle alignment mechanism and cutting edge for cutting suture

Modular needle holder with carbide insert suitable for straight and curved needles

Rinsing connector locking cap
for Luer port, 3 mm.....887.00

Needle Holder, *5 mm*

Single Piece Design

Axially aligned handle with locking mechanism

Instrument	*WL* 310 mm	Type
Needle holder, straight by Messroghli	●	**8383.533**

Knot Pusher, *5 mm*

Modular Design for extracorporeal suturing

Jaw insert		Sheath tube, insulated	Handle type	**Complete instrument** • Jaw insert • Sheath tube • Handle
		WL 310mm	without ratchet, rotatable, no HF	
Instrument	Type	8393.913	8393.0001	Type
Knot pusher, both jaws opening, with distal fork, double action	8393.345	●	●	**8393.3451**

Knot Pusher, *5 mm*

for endoscopic suturing

Instrument	Working Length	Type
Knot pusher, for intra-abdominal knots	330 mm	**8383.55**
Knot pusher, for extracorporeal knots*	330 mm	**8383.551***

*for use with applicator 8383.78

Knot Pusher, *5 mm*

for extracorporeal suturing

	330 mm WL	Typen / *Types*
Extracorporeal knot pusher *with distal notch and lateral opening for optimum knotting, extremely atraumatic tip for use as probe*	●	**8383.552**

Applicator / Ligature Loops, *5 mm*

for endoscopic suturing

8383.78

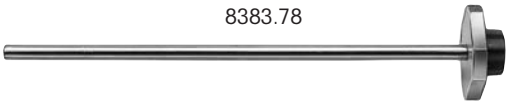

Instrument	Working Length	Type
Applicator, with sealing cap*	155 mm	**8383.78**

*For ligature loops or for introducing a suture with the 3 mm needle holder

Replacement sealing caps, pkg of 12, blue 89.02BL

Clip Applicator, *10 mm*

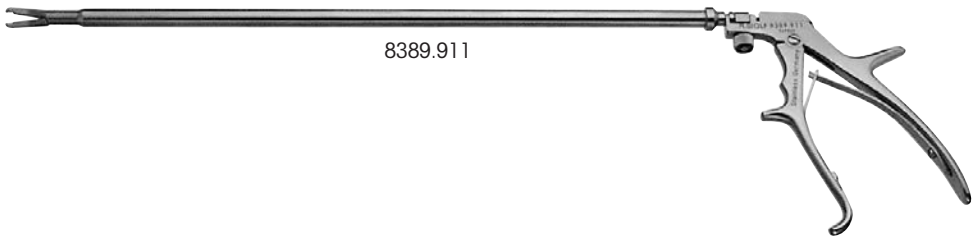

Instrument	Working Length	Type
Clip applicator	340 mm	**8389.911**
Introducing sleeve	**Introducing sleeve,** with sealing cap (89.02BL)	**8389.991**

For clip ligation
using the Ethicon Ligaclip® *EXTRA LT 300*

Tissue Retractors

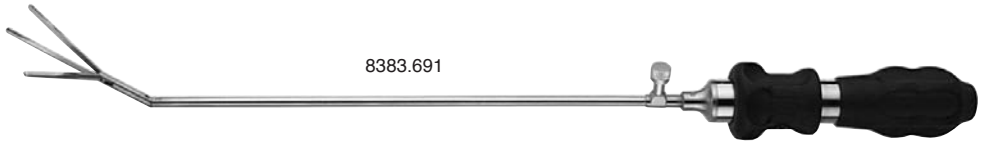

Instrument	OD	Working Length	Type
Tissue retractor, straight prongs	5 mm	320 mm	**8383.691**
Tissue retractors, S-shaped, set of two	12 mm	170 mm	**8928.90**

Myoma Screw, *5 mm / 10 mm*

Instrument	Working Length	Type
Myoma screw, rigid, 5 mm	320 mm	**8383.611**
Myoma screw, rigid, 10 mm	320 mm	**8385.301**

Tenaculum Grasping Forceps

Axially aligned handle with locking mechanism

Instrument	Diameter	Working Length	Type
Tenaculum grasping forceps, dual action jaws	10 mm	300 mm	**8385.181**

For grasping fibroids or uterine tissue for morcellation

Trocar sleeve, 15 mm.....8943.60

Dilatation 10-15 mm rod, and sleeve set 8943.601

Axial handle with ratchet

Instrument	Diameter	Working Length	Type
Tenaculum grasping forceps, dual action jaws	5 mm	350 mm	**8370.26**

Bipolar Forceps, *3.5 mm*

Modular Design with Spring Handle

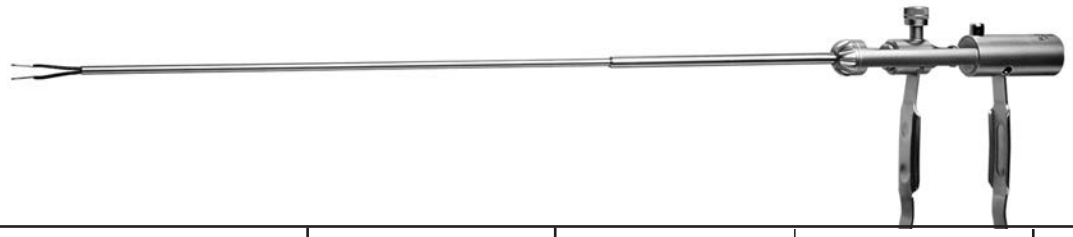

Tong insert		*Outer tube*	*Screw-on cap with sleeve*	*Sliding handle*	**Complete instrument** • Tong insert • Outer tube • Screw-on cap • Spring handle
		 WL 340 mm			
Replacement Tongs	Type	8391.921	8393.978	8393.975	Type
 Bipolar forceps, 8 mm paddle	8391.715	●	●	●	**8391.742**

Replacement sealing cap, 12 / pkg 88.03BK
Replacement rinsing cap 887.00
Reusable bipolar connecting cable, 9.8 Ft. (3m) 8108.031
Single use, disposable bipolar connecting cable, 9.8 Ft. (3m) (pack/10) 8108.011

Bipolar connecting cable table, see Accessories section

Classic Kleppinger™ Bipolar Forceps, *5 mm*

Modular Design with Syringe Style Handle

Tong insert		*Syringe Style Handle*		**Complete instrument** • Tong insert • Handle assembly
		WL 320 mm	*WL* 430 mm	
Replacement Tongs	Type	8383.240	8384.240	Type
Bipolar forceps, T-grasper	8393.704	●		**8383.2401**
	8394.704		●	**8384.2401**
Bipolar grasping forceps with Teflon tooth	8393.705	●		**8383.2402**
	8394.705		●	**8384.2402**
Bipolar grasping forceps, Kleppinger	8393.714	●		**8383.2403**
	8394.714		●	**8384.2403**
Bipolar forceps. tweezer	8393.724	●		**8383.2404**
	8394.724		●	**8384.2404**
Bipolar forceps, paddle by Reich	8393.725	●		**8383.2405**
	8394.725		●	**8384.2405**
Bipolar forceps. micro	8393.726	●		**8383.2406**
	8394.726		●	**8384.2406**

Reusable bipolar connecting cable, 9.8 ft. 8108.031

Single-use, disposable bipolar connecting cable, 9.8 ft. (pack/10) 8108.011

Classic Kleppinger™ Bipolar Forceps, *5 mm*

Modular Design with Scissor Style Handle

Tong insert		*Scissor Style Handle*		**Complete instrument** • Tong insert • Handle assembly
		WL 320 mm	*WL* 455 mm	
Replacement Tongs	Type	8383.210	8384.210	Type
Bipolar forceps, T-grasper	8393.704	●		**8383.2101**
	8394.704		●	**8384.2101**
Bipolar grasping forceps with Teflon tooth	8393.705	●		**8383.2102**
	8394.705		●	**8384.2102**
Bipolar grasping forceps, Kleppinger	8393.714	●		**8383.2103**
	8394.714		●	**8384.2103**
Bipolar forceps. tweezer	8393.724	●		**8383.2104**
	8394.724		●	**8384.2104**
Bipolar forceps, paddle by Reich	8393.725	●		**8383.2105**
	8394.725		●	**8384.2105**
Bipolar forceps. micro	8393.726	●		**8383.2106**
	8394.726		●	**8384.2106**

Reusable bipolar connecting cable, 9.8 ft. 8108.031
Single use, disposable bipolar connecting cable, 9.8 Ft. (3m) (pack/10) 8108.011
Replacement sealing cap, 12/pkg. 88.04GR

Bipolar Forceps, *5 mm*

Modular Design with Sliding Handle

Tong insert		Sliding sleeve		Outer tube		Sliding handle	Complete instrument • Tong insert • Sliding sleeve • Outer tube • Sliding handle
		WL 300 mm	WL 450 mm	WL 300 mm	WL 415 mm		
Replacement Tongs	Type	8393.923	8394.923	8393.924	8394.924	8393.974	Type
Bipolar forceps, T-grasper	8393.704	●		●		●	**8393.761**
	8394.704		●		●	●	**8394.761**
Bipolar grasping forceps with Teflon tooth	8393.705	●		●		●	**8393.762**
	8394.705		●		●	●	**8394.762**
Bipolar grasping forceps, Kleppinger	8393.714	●		●		●	**8393.771**
	8394.714		●		●	●	**8394.771**
Bipolar forceps. tweezer	8393.724	●		●		●	**8393.801**
	8394.724		●		●	●	**8394.801**
Bipolar forceps, paddle by Reich	8393.725	●		●		●	**8393.823**
	8394.725		●		●	●	**8394.823**
Bipolar forceps. micro	8393.726	●		●		●	**8393.813**
	8394.726		●		●	●	**8394.813**

Replacement sealing cap, 12 / pkg 88.03BK
Replacement rinsing cap 887.00
Reusable bipolar connecting cable, 9.8 Ft. (3m) 8108.031
Single use, disposable bipolar connecting cable, 9.8 Ft. (3m) (pack/10) 8108.011

Bipolar connecting cable table, see Accessories section

Bipolar Forceps, *5 mm*

Modular Design with Spring Handle

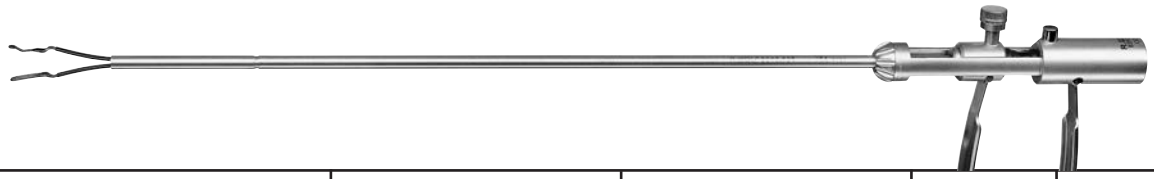

Tong insert		*Sliding sleeve*		*Outer tube*		*Sliding handle*	**Complete instrument** • Tong insert • Sliding sleeve • Outer tube • Spring handle
		WL 300 mm	*WL* 440 mm	*WL* 300 mm	*WL* 440 mm		
Replacement Tongs	Type	8393.923	8394.923	8393.925	8394.925	8393.975	Type
Bipolar forceps, T-grasper	8393.704	●		●		●	**8393.731**
	8394.704		●		●	●	**8394.731**
Bipolar grasping forceps with Teflon tooth	8393.705	●		●		●	**8393.732**
	8394.705		●		●	●	**8394.732**
Bipolar grasping forceps, Kleppinger	8393.714	●		●		●	**8393.741**
	8394.714		●		●	●	**8394.741**
Bipolar forceps. tweezer	8393.724	●		●		●	**8393.781**
	8394.724		●		●	●	**8394.781**
Bipolar forceps, paddle by Reich	8393.725	●		●		●	**8393.803**
	8394.725		●		●	●	**8394.803**
Bipolar forceps. micro	8393.726	●		●		●	**8393.793**
	8394.726		●		●	●	**8394.793**

Replacement sealing cap, 12 / pkg 88.03BK
Replacement rinsing cap 887.00
Reusable bipolar connecting cable, 9.8 Ft. (3m) 8108.031
Single use, disposable bipolar connecting cable, 9.8 Ft. (3m)(pack/10) 8108.011

Bipolar connecting cable table, see Accessories section

Bipolar Forceps, *5 mm*

Modular Design with Open Spring Handle

Tong insert		*Open spring handle with outer tube*		**Complete instrument** • Tong insert • Handle assembly
		WL 290 mm	*WL* 445 mm	
Replacement Tongs	Type	8383.974	8384.974	Type
Bipolar forceps, T-grasper	8393.704	●		**8383.23**
	8394.704		●	**8384.23**
Bipolar grasping forceps with Teflon tooth	8393.705	●		**8383.232**
	8394.705		●	**8384.232**
Bipolar grasping forceps, Kleppinger	8393.714	●		**8383.233**
	8394.714		●	**8384.233**
Bipolar forceps. tweezer	8393.724	●		**8383.234**
	8394.724		●	**8384.234**
Bipolar forceps, paddle by Reich	8393.725	●		**8383.236**
	8394.725		●	**8384.236**
Bipolar forceps. micro	8393.726	●		**8383.235**
	8394.726		●	**8384.235**

Replacement sealing cap, 12 / pkg.....89.05YE
Reusable bipolar connecting cable, 9.8 Ft. (3m) 8108.031
Single use, disposable bipolar connecting cable, 9.8 Ft. (3m) (pack/10) 8108.011

Bipolar connecting cable table, see Accessories section

Richard Wolf **PowerBlade** Bipolar Forceps, *5 mm*

for bipolar cutting and coagulation

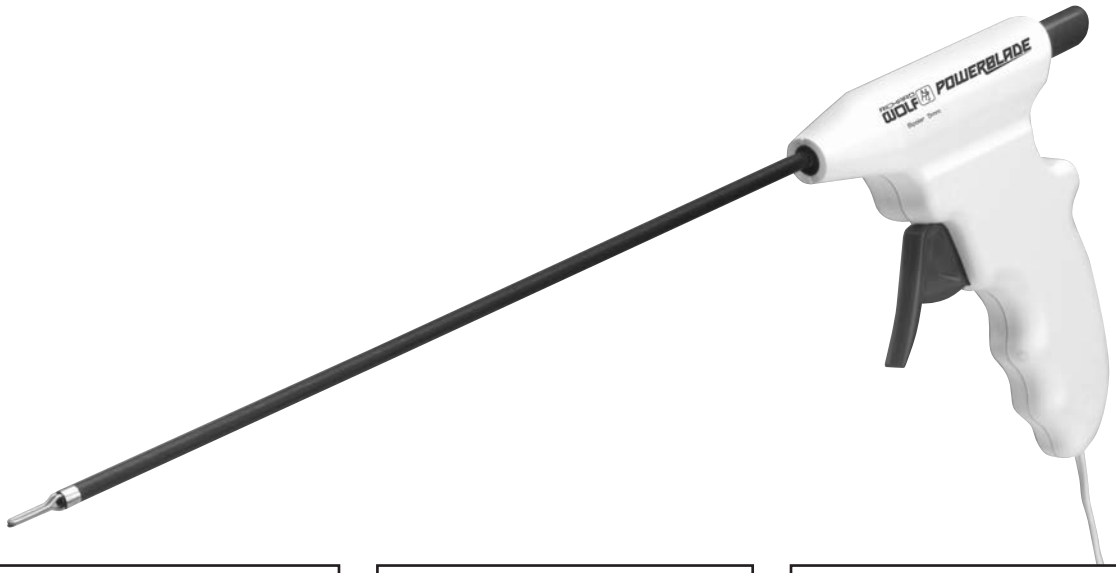

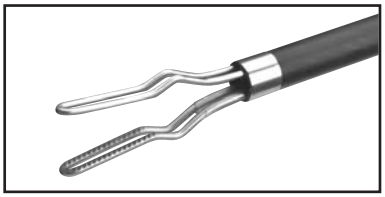

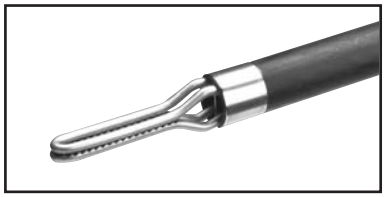

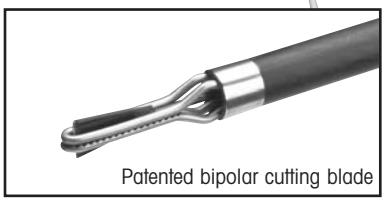

Patented bipolar cutting blade

Connector Style	Diameter	Working Length	Quantity*	Catalog Number
Connector for Richard Wolf generators	5 mm	310 mm	5 / Box	**4393.3865**
	5 mm	430 mm	5 / Box	**4394.3865**
Connector for Valleylab, ConMed, ERBE style generators	5 mm	310 mm	5 / Box	**4393.2865**
	5 mm	430 mm	5 / Box	**4394.2865**

*Individually packed sterile, disposable.

Bipolar generator 2352.011

ERAGON Bipolar Forceps, *5 mm*

Modular Design rotatable

Jaw Insert	*Sheath*	*Handle*	***Complete Instrument*** • *Jaw Insert* • *Sheath* • *Handle*
	310 mm WL		
Part Number	83930.921	83930.0102	
Triangular, fenestrated grasper with serrations	83930.031	●	●	**83930.0312**
Maryland grasper / dissector	83930.032	●	●	**83930.0322**
Dolphin nose grasper / dissector	83930.033	●	●	**83930.0332**
Rectangular, fenestrated grasper with serrations	83930.034	●	●	**83930.0342**
Blunt tip grasper	83930.035	●	●	**83930.0352**
Grasper with tissue retaining pin	83930.036	●	●	**83930.0362**
Metzenbaum scissors	83930.041	●	●	**83930.0412**

Bipolar cable, reusable
for Wolf generator, 9.8 ft 8108.131

Bipolar cable, reusable
for Valleylab generator, 9.8 ft 8108.134

Bipolar Generator 2352

with integrated ammeter

Automatically delivers the lowest power required to achieve thorough coagulation of tissue.

Utilizes **cutting** wave form to ensure precise, thorough coagulation of tissue with minimal adherence to forceps

Microprocessor control of all functions and safety systems

Precise pre-selection of power limit from 1 - 50 watts

Acoustic and visual signal when the generator is activated

Proprietary acoustic and visual ammeter assists in determining the endpoint to coagulation

- **acoustic**

the signal varies between 500 Hz and 150 Hz depending on the HF current flow

- **visual**

LED bar display of HF current flow

Continuity test of the generator, cable and instrument system can be performed prior to procedure by closing the jaws of the forceps and activating the foot switch

All basic settings such as power, activation time and acoustic volume can be individually programmed and saved

Bipolar generator
includes foot switch (2030.103)
and 8 ft. power cord.....2352.011

Electrode, *1.7 mm*

monopolar

Instrument	*WL* 400 mm	Type
Coagulation button electrode	●	**823.06**

HF connecting cables:,

Wolf to Valleylab, 10 ft., Reusable 815.033

Wolf to Valleylab, 10 ft., Disposable, sterile, 10 / pkg 415.0030

Electrode, *3 mm*

monopolar

Instrument	*WL* 450 mm	Type
Button electrode	●	**8380.40**

HF connecting cable:,

Wolf to Valleylab, 10 ft., Reusable 815.033

Electrodes, *3.5 mm*

monopolar

Instrument	Working Length 310 mm	Type
Hook electrode	●	**8379.452**
Button electrode	●	**8379.462**
Needle electrode	●	**8379.482**

HF connecting cables:,

Wolf to Wolf, 10 ft., Reusable 8106.132

Wolf to Wolf, 10 ft., Disposable, sterile, 10 / pkg 4106.1320

HF connecting cables:,

Wolf to Valleylab, 10 ft., Reusable 8106.033

Wolf to Valleylab, 10 ft., Disposable, sterile, 10 / pkg 4106.0330

Electrodes, *5 mm*

monopolar

Instrument	Working Length 330 mm	Working Length 450 mm	Type
	●		**8383.40**
Button electrode		●	**8384.40**

HF connecting cable:,

Wolf to Valleylab, 10 ft., Reusable 815.033

Instrument	Working Length 340 mm	Working Length 420 mm	Product Code
	●		**8383.423**
L-Hook electrode		●	**8384.423**
	●		**8383.425**
J-Hook electrode		●	**8384.425**
Needle electrode	●		**8383.426**
Spatula electrode	●		**8383.428**

HF connecting cables:,

Wolf to Wolf, 10 ft., Reusable 8106.132

Wolf to Wolf, 10 ft., Disposable, sterile, 10/pkg 4106.1320

HF connecting cables:,

Wolf to Valleylab, 10 ft., Reusable 8106.033

Wolf to Valleylab, 10 ft., Disposable, sterile, 10/pkg 4106.0330

Multifunction Suction-Irrigation System

Suction-Irrigation Handle

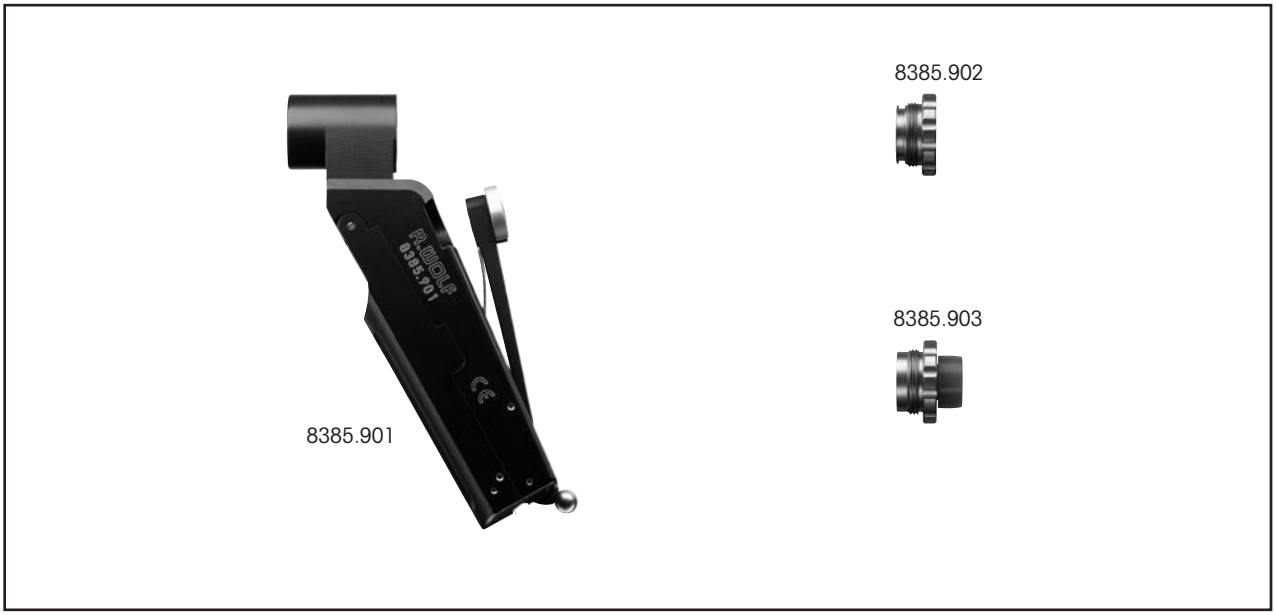

Autoclavable
Durable
Low long-term costs
Universal applications
Interfaces for various attachments
Large lumen for efficient irrigation and suction

Suction-irrigation handle *8385.901*

Sealing cap *8385.902*

Required to use 5 mm Ø auxiliary instruments:
Sealing attachment *with opening*
and membrane valve *8385.903*

Spare membrane valve *8920.911*

Suction-irrigation tube set,
disposable, 10/pkg *4170.956*

Multifunction Suction-Irrigation System

Possible Combinations

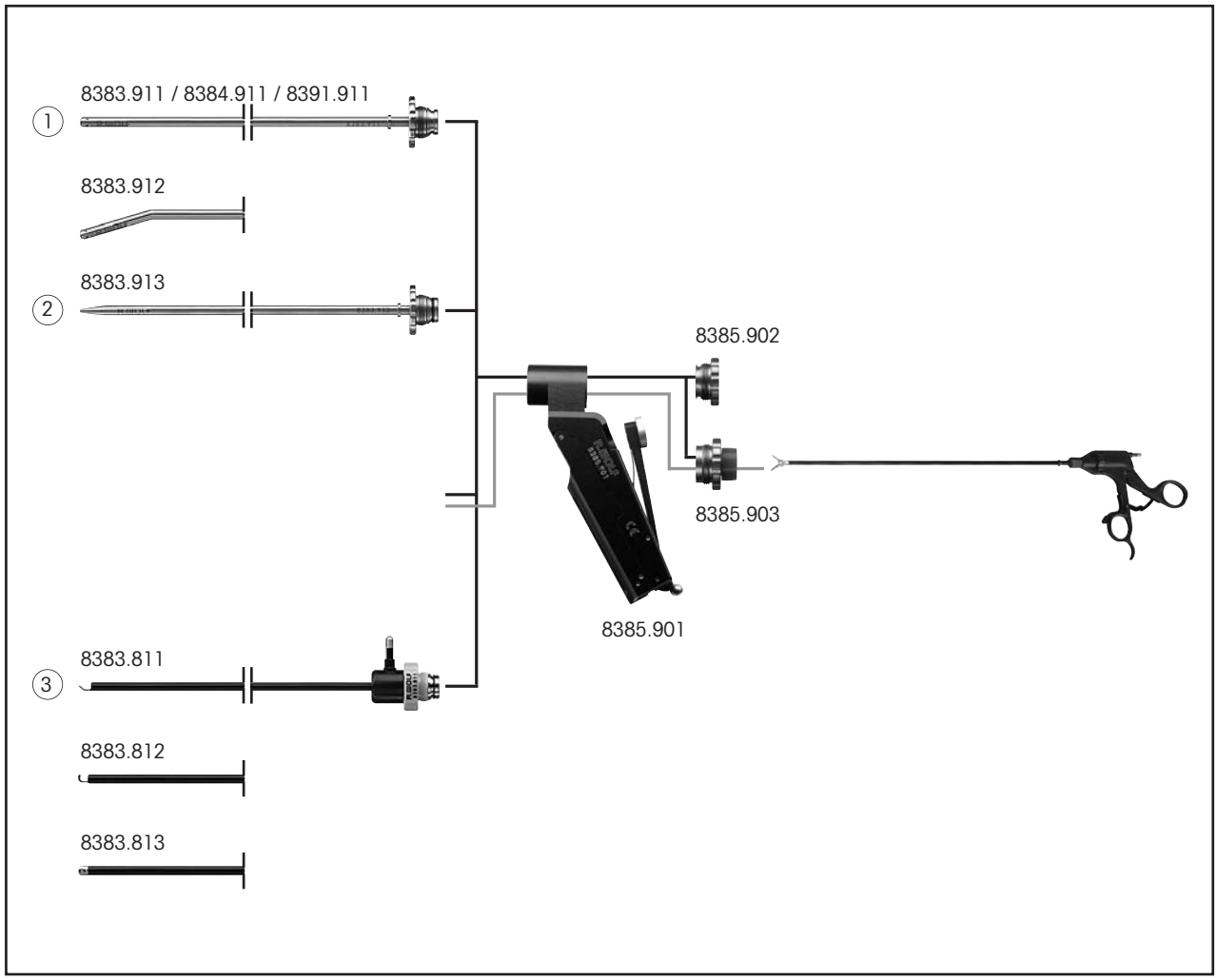

1 **Suction or irrigation:**
Suction-irrigation *8383.911, 8384.911, 8391.911*
Suction-irrigation tube, angled, (thoracoscopy) *8383.912*
also: sealing cap *8385.902*

2 **Blunt aquadissection**
Pressure irrigation tube *8383.913*
also: sealing cap *8385.902*

3 **Tissue dissection with HF**
HF spatula probe *8383.811*
HF hooked probe *8383.812*
HF button electrode *8383.813*
also: sealing cap *8385.902*

Multifunction Suction-Irrigation System

Suction-Irrigation Tubes

Instrument	Ø	WL	Type
Suction-irrigation tube	3.5 mm	310 mm	**8391.911**
Suction-irrigation tube	5 mm	310 mm	**8383.911**
	5 mm	450 mm	**8384.911**
	5 mm	310 mm *Curved distal tip*	**8383.912**
Irrigation tube for aquadissection	5 mm	310 mm	**8383.913**

Required for 8385.931 / .951: ***Sealing attachment*** *with opening and membrane valve* ***Spare membrane valve*** *(8920.911)*		**8385.903**

Multifunction Suction-Irrigation System

monopolar instruments

Instrument	5 mm Ø	*WL* 310 mm	Type
HF spatula probe	●	●	**8383.811**
HF hook electrode	●	●	**8383.812**
HF button electrode	●	●	**8383.813**
as an alternative to the suction irrigation handle: ***Irrigation attachment*** *with two-way tap*			**8383.819**

Laparopump 2215

Technical Data

Effective irrigation and aspiration of fluids during laparoscopic, minimally invasive surgery
Simple handling and straightforward unit design
Optimum irrigation and aspiration performance
Compatible with suction-irrigation instruments with integrated valves, particulary suitable for modular suction/irrigation handles from R. Wolf
Extremely safe due to intelligent pressure management controls
Simple attachement to irrigator for either I.V. stands or video carts

Laparopump 2215
110-120V, 60 Hz including mounting bracket
(2215.991) for IV stand and power cord 2215.002

Laparopump 2215

Technical Data

Classification	*Protection class 1, type BF, IP41*
Power supply	*110-120V; 60 Hz*
Power consumption	55 VA
Dimensions (W x H x D)	143 x 317 x 170 mm
Maximum capacity	*Irrigation: 1.8 l / min, Aspiration: 1.8 l / min*
Maximum irrigation pressure	400 mm Hg (±50 mm Hg)
Vacuum, minimum	-60 kpa (-10 kpa)
Weight	*approx. 6 kg*

Accessories:

Suction and irrigation tube set
disposable, sterile , 10/pkg.....4170.225

Tube set for attachment to suction port
with filter, disposable , 10/pkg.....4170.902

Suction canisters
3 liter, complete with lids, connecting tubes and elbow fittings,
disposable , 36/pkg.....2215.972

Mounting bracket for suction canister *.....2215.992*

Wire rings
for holding suction canisters,12/pkg.....2215.973

I.V. pole
with sturdy 5-arm base 2215.974

For mounting on the side of equipment / video carts
mounting rail for use on flat vertical surfaces 31110.901
clamps for holding I.V. pole to mounting rail (qty 2) 31110.902
I.V. pole used with clamps and mounting rail.....31110.905
spacers for use with mounting rail 75093.052

Suction / Irrigation Tube, *3 mm*

with Luer lock connector

Instrument	Working Length	Type
Coagulating suction tube, with Luer lock connector	450 mm	**8380.71**

HF connecting cables:,

Wolf to Wolf, 10 ft., Reusable 8106.132

Wolf to Wolf, 10 ft., Disposable, sterile, 10 / pkg 4106.1320

HF connecting cables:,

Wolf to Valleylab, 10 ft., Reusable 8106.033

Wolf to Valleylab, 10 ft., Disposable, sterile, 10 / pkg 4106.0330

Suction / Irrigation Tubes, *5 mm*

Instrument	Working Length	Type
Suction / irrigation tube with Luer lock connector (4 mm inner diameter) with distal openings	300 mm	**8383.51**
Suction tube with Luer lock connector, (3 mm inner diameter)	330 mm	**8383.72**
Suction and instillation tube, with Luer lock connector (3 mm inner diameter)	320 mm	**8383.77**

Instrument	Working Length	Type
Suction / Irrigation tube with Luer lock connector, graduated markings, valve, (3 mm inner diameter), distal openings	330 mm	**8383.68**
	445 mm	**8384.68**

Suction / Irrigation Tubes, *5 mm*

Instrument	Working Length	Type
Suction / irrigation tube, with central and lateral, distal openings, two-way lever valve	290 mm	**8383.732**
	410 mm	**8384.732**

Instrument	Working Length	Type
Combination suction and irrigation tube, with finger valves, lateral, distal opening	300 mm	**8383.94**

Instrument	Working Length	Type
Combination suction and irrigation tube, with trumpet valves, lateral, distal opening	320 mm	**8383.755**

Proximal end-cap 8852.90

Coagulation / Suction Tubes, *5 mm*

monopolar

with Luer lock connector and one valve

Instrument	Working Length 315 mm	Working Length 450 mm	Type
Coagulation / Suction tube, with trumpet valve, Luer lock connector, (3 mm inner diameter), lateral, distal openings	●		**8383.71**
		●	**8384.71**
Coagulation / Suction tube, with stopcock valve, Luer lock connector (3 mm inner diameter), lateral, distal openings	●		**8383.73***
		●	**8384.73***

HF connecting cable:

Wolf to Wolf, 10 ft, Reusable. 815.132

HF connecting cables:

Wolf to Valleylab, 10 ft., Reusable 815.033

Wolf to Valleylab, 10 ft., Disposable, sterile, 10/pkg 415.0030

***HF connecting cables:**

Wolf to Wolf, 10 ft., Reusable 8106.132

Wolf to Wolf, 10 ft., Disposable, sterile, 10/pkg 4106.1320

***HF connecting cables:,**

Wolf to Valleylab, 10 ft., Reusable 8106.033

Wolf to Valleylab, 10 ft., Disposable, sterile, 10/pkg 4106.0330

Cannulas, *2 mm*

for laparoscopic Microsurgery

Instrument	Ø	*WL* 240 mm	Type
Injection and aspiration cannula	1.4 / 2.0 mm	●	**8309.241**
Liver biopsy cannula	1.6 / 2.0 mm	●	**8309.261**

Cannulas, *3.5 mm*

with Luer lock connector

Instrument	Tip Diameter	Working Length	Type
Aspiration / injection needle	17 G	310 mm	**8379.732**

Cannulas, *5 mm*

with Luer lock connector

8383.60 / .65

8384.60 / .65

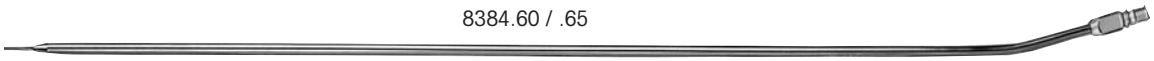

Instrument	Tip Diameter	Working Length 345 mm	Working Length 415 mm	Type
Injection and puncture cannula with Luer lock connector (3 mm inner diameter)	0.7 mm (22 G)	●		**8383.60**
			●	**8384.60**
Injection cannula with Luer lock connector (3 mm inner diameter)	1.8 mm (15 G)	●		**8383.65**
			●	**8384.65**
Insertion sleeve Prevents the tip of the cannula from damage when opening the valve of the trocar sleeve.	—			**8383.00**

Cannulas, *5 mm*

with suction control and Luer lock connector

Instrument	Working Length	Type
Puncture cannula with suction control and 4 mm Luer lock connector (3 mm inner diameter)	315 mm	**8383.49**
Insertion sleeve Prevents the tip of the cannula from damage when opening the valve of the trocar sleeve.	—	**8383.00**

Probes, *5 mm*

Instrument	Working Length 320 mm	Working Length 445 mm	Type
Probe, graduated (cm) for palpation and measurement with centimeter markings up to 10 cm		●	**8384.66**
Probe solid with centimeter markings up to 5 cm	●		**8383.661**
		●	**8384.661**
Probe solid* titanium (grey matte finish), with centimeter markings up to 5 cm	●		**8383.662**
		●	**8384.662**

*For use with lasers

Trocars

- 2 - 3.5 mm Trocars
- 5 - 5.5 mm Trocars
- 7 - 10 mm Trocars
- 12.5 - 15 mm Trocars
- Trotec Shielded Trocars
- Dilatation and Extraction Instruments
- Fascial Closure Device
- Verres Needles
- Insufflators

Trocar Sleeves, *2 mm*

with automatic valve

Trocar sleeve 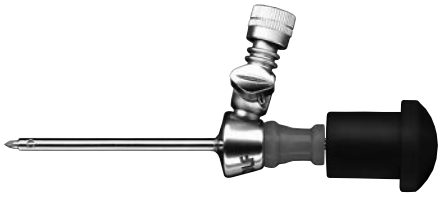					
Instrument	WL	Inner Diameter	Without Port	With Port	**Trocar,** pyramidal tip
metal sleeve, standard with straight distal tip	60 mm	2 mm	—	**8309.012**	**8309.121**
	100 mm	2 mm	—	**8309.014**	**8309.123**
plastic sleeve with retaining thread	60 mm	2 mm	**8309.072**	—	**8309.121**

Replacement sealing caps, 12/pkg.,
for 2 mm trocar sleeves, 1-2 mm, red 88.01RE

Luer locking cap,
for Luer port, 3 mm 887.00

RIWO-ART Trocar Sleeves, *3.5 mm*

with self sealing magnetic ball-valve

RIWO-ART trocar sleeves with insufflation port 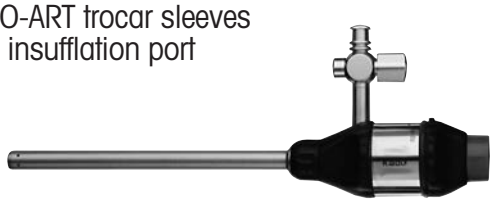					
Instrument	WL	Inner Diameter	With Port	**Trocar,** blunt, conical tip	**Trocar,** pyramidal tip
metal sleeve, standard straight distal tip	100 mm	3.5 mm	**8903.014**	**8903.103**	**8903.123**
plastic sleeve	60 mm	3.5 mm	**8903.072**	**8903.101**	**8903.121**
with retaining thread	100 mm	3.5 mm	**8903.034**	**8903.103**	**8903.123**

Replacement ball,
for RIWO-ART trocar sleeves, 3.5 mm.....8921.901

Replacement O-rings, pkg of 10,
for RIWO-ART trocar sleeves, 3.5 mm.....8921.951

Replacement sealing caps, pkg of 12,
for RIWO-ART trocar sleeves, 3.5 mm, red.....89.01RE

RIWO-ART Trocar Sleeves, *5.5 mm*

with self sealing magnetic ball-valve

RIWO-ART trocar sleeves
with insufflation port

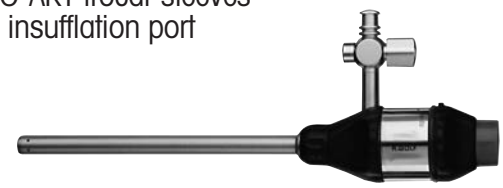

Instrument	WL	Inner Diameter	Without Port	With Port	**Trocar,** blunt, conical tip	**Trocar,** conical tip	**Trocar,** pyramidal tip
metal sleeve, standard	60 mm	5.5 mm	**8921.052**	—	**8921.101**	**8921.111**	**8921.121**
	100 mm	5.5 mm	—	**8921.014**	**8921.103**	**8921.113**	**8921.123**
straight distal tip	150 mm	5.5 mm	—	**8921.016**	**8921.105**	**8921.115**	**8921.125**
metal sleeve, standard	60 mm	5.5 mm	**8921.051**	—	**8921.101**	**8921.111**	**8921.121**
oblique distal tip	100 mm	5.5 mm	—	**8921.013**	**8921.103**	**8921.113**	**8921.123**
metal sleeve with retaining thread	60 mm	5.5 mm	**8921.062**	—	**8921.101**	**8921.111**	**8921.121**
	100 mm	5.5 mm	—	**8921.024**	**8921.103**	**8921.113**	**8921.123**
straight distal tip	150 mm	5.5 mm	—	**8921.026**	**8921.105**	**8921.115**	**8921.125**
metal sleeve with retaining thread	60 mm	5.5 mm	**8921.061**	—	**8921.101**	**8921.111**	**8921.121**
oblique distal tip	100 mm	5.5 mm	—	**8921.023**	**8921.103**	**8921.113**	**8921.123**
Plastic sleeve with retaining tread	60 mm	5.5 mm	**8921.072**	—	**8921.101**	**8921.111**	**8921.121**
	100 mm	5.5 mm	—	**8921.034**	**8921.103**	**8921.113**	**8921.123**

Replacement ball,
for RIWO-ART trocar sleeves, 5.5 mm.....8921.901

Replacement O-rings, pkg of 10,
for RIWO-ART trocar sleeves, 5.5 mm.....8921.951

Replacement sealing caps, pkg of 12,
for RIWO-ART trocar sleeves, 5.5 mm, blue 89.02BL

Trocar Sleeves, *5.5 mm*

Self-retaining, threaded, reusable, plastic trocar sleeve
with automatic membrane valve, (8920.911) and sealing caps (89.02BL)

Instrument	WL	Inner Diameter	Type	**Trocar,** conical tip	**Trocar,** pyramidal tip
	55 mm*	5.5 mm	**8920.001**	**8920.011**	**8920.021**
	95 mm	5.5 mm	**8920.003**	**8920.013**	**8920.023**
Insertion sleeve	*This sleeve prevents the tip of the cannula being damaged when opening the valve of the trocar sleeve and protects instrument accessories (for example sealing caps, membrane valves etc.) from being damaged by sharp instruments.*				**8383.00**

*also suitable for pediatric laparoscopy

Replacement membrane valves, pkg of 10.....89.103

Replacement sealing caps, pkg of 12,
for 5.5 mm trocar sleeves, 5.5 mm, blue .....89.02 BL

Replacement cap housing, pkg of 1,
for 5.5 mm trocar sleeves, (8920) 15135.270

Trocar Sleeves, *5.5 mm*

Reusable, plastic trocar sleeve with stopcock

Instrument	WL	Inner Diameter	Type	**Trocar,** conical tip	**Trocar,** pyramidal tip
	65 mm	5.5 mm	**8919.333**	**8919.3312**	**8919.3313**
	105 mm	5.5 mm	**8919.353**	**8919.3512**	**8919.3513**
Insertion sleeve	*This sleeve prevents the tip of the cannula being damaged when opening the valve of the trocar sleeve and protects instrument accessories (for example sealing caps, membrane valves etc.) from being damaged by sharp instruments.*				**8383.00**

Replacement sealing caps, pkg of 12,
for 5.5 mm trocar sleeves, 5.5 mm, blue .....89.02 BL

Trocar Sleeves, *5 mm / 5.5 mm*

Insulated trocar sleeve with automatic clip valve

Instrument	WL	Inside Diameter	Type	**Trocar 5.5 mm,** pyramidal tip
without stopcock	100 mm	5.5 mm	**8351.07**	**8351.14**
with stopcock	100 mm	5.5 mm	**8940.07**	**8351.14**

Insulated trocar sleeve without automatic valve

Instrument	WL	Inside Diameter	Type	**Trocar 5.5 mm,** pyramidal tip
without stopcock	120 mm	5.5 mm	**8351.03**	**8351.14**

Insulated Reich self-retaining trocar sleeve without automatic valve

Instrument	WL	Inside Diameter	Type	**Trocar 5 mm,** pyramidal tip
without stopcock	55 mm	5 mm	**8351.02**	**8351.122**

Replacement sealing caps, pkg of 12,
for 5.5 mm and 5 mm trocar sleeves, 5 mm, blue.....89.02 BL

RIWO-ART Trocar Sleeves, *7 mm*

with self sealing magnetic ball-valve

RIWO-ART trocar sleeves with insufflation port

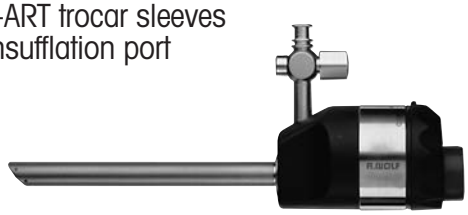

Instrument	WL	Inner Diameter	With Port	**Trocar,** blunt conical tip	**Trocar,** conical tip	**Trocar,** pyramidal tip
metal sleeve, standard	100 mm	7 mm	**8922.014**	**8922.103**		**8922.123**
straight distal tip	150 mm	7 mm	**8922.016**	—	**8922.115**	**8922.125**

Vario Port reducer,
7 mm - 5 mm 8923.802
(Also works as 12.5 mm and 10 mm - 5 mm)

Replacement ball,
for RIWO-ART trocar sleeves, 7 - 12.5 mm 8923.901

Replacement O-rings, pkg of 10,
for RIWO-ART trocar sleeves, 7 - 12.5 mm 8923.951

Replacement sealing caps, pkg of 12,
for RIWO-ART trocar sleeves, 7 mm, brown 89.171BR

Replacement sealing caps, pkg of 12,
for Vario Port reducer (8923.801) 89.02BL

Trocar Sleeves, *8 mm*

with trumpet valve, metal

Instrument	WL	Inner Diameter	Type	**Trocar,** pyramidal tip
straight distal tip	105 mm	8 mm	**8932.01**	**8932.12**

Replacement sealing caps, pkg of 12,
for 8 mm trocar sleeves, 8 mm, yellow.....89.05YE

RIWO-ART Trocar Sleeves, *10 mm*

with self sealing magnetic ball-valve

RIWO-ART trocar sleeves
with insufflation port

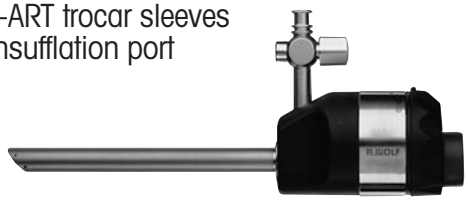

Instrument	WL	Inner Diameter	With Port	**Trocar,** blunt conical tip	**Trocar,** conical tip	**Trocar,** pyramidal tip
metal sleeve, standard straight distal tip	100 mm	10 mm	**8923.014**	**8923.103**	**8923.113**	**8923.123**
	150 mm	10 mm	**8923.016**	—	**8923.115**	**8923.125**
metal sleeve, standard oblique distal tip	100 mm	10 mm	**8923.013**	**8923.103**	**8923.113**	**8923.123**
metal sleeve with retaining thread straight distal tip	100 mm	10 mm	**8923.024**	**8923.103**	**8923.113**	**8923.123**
	150 mm	10 mm	**8923.026**	–	**8923.115**	**8923.125**
metal sleeve with retaining thread oblique distal tip	100 mm	10 mm	**8923.023**	**8923.103**	**8923.113**	**8923.123**

Vario Port reducer,
10 mm - 5 mm 8923.802
(Also works as 12.5 mm and 7 mm - 5 mm)

Replacement ball,
for RIWO-ART trocar sleeves, 7 - 12.5 mm 8923.901

Replacement O-rings, pkg of 10,
for RIWO-ART trocar sleeves, 7 - 12.5 mm 8923.951

Replacement sealing caps, pkg of 12,
for Vario Port reducer, 5 mm 89.02BL

Replacement sealing caps, pkg of 12,
for RIWO-ART trocar sleeves, 10 mm, red 89.08RE

Self retaining sleeve, for standard
RIWO-ART trocar sleeves, 10 mm,
10 mm 8934.301

Trocar Sleeves / Self-retaining Sleeves, *10 mm*

with trumpet valve, metal 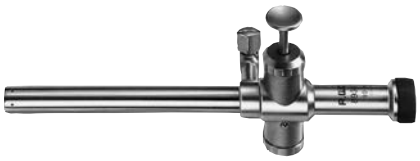					
Instrument	WL	Inner Diameter	Type	**Trocar,** conical tip	**Trocar,** pyramidal tip
straight distal tip	100 mm	10 mm	**8934.01**	**8923.113**	**8923.123**
	145 mm	10 mm	**8934.071****	**8923.115**	**8923.125**
oblique distal tip	100 mm	10 mm	**8934.03***	**8923.113**	**8923.123**

*The trocar sleeve with the oblique tip allows tissue to be penetrated more easily.

**long version for heavier patients

Replacement sealing caps, pkg of 12,
for 10 mm trocar sleeves, 10 mm, red .....89.08 RE

For 10 mm trocar sleeves:*
Self-retaining sleeve, 10 mm 8934.301
*for use with 8934… series and 8923… series RIWO-ART trocar sleeves

Sliding Cone for 10 mm RIWO-ART Trocar Sleeves

for Open Laparoscopy / Pelviscopy

8934.901	**Sliding cone** to fit over trocar sleeves shown below. Also fits R.Wolf trumpet valve 10 mm trocar sleeves with smooth sheath, 8934.01/.03/.071			**8934.901**
Instrument	Working Length	Inner Diameter	Type	also available: **Obturator,** blunt tip
 RIWO-ART trocar sleeve (standard length)	100 mm	10 mm	**8923.014**	**8934.15**
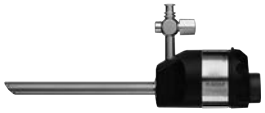 **RIWO-ART trocar sleeve** and oblique distal tip (standard length)	100 mm	10 mm	**8923.013**	**8934.15**
 RIWO-ART trocar sleeve (long version)	150 mm*	10 mm	**8923.016**	**8934.175**

*long version for heavier patients

	To expose anatomical layers: **Tissue retractors,** S-shaped, set of two	**8928.90**

RIWO-ART Trocar Sleeves, *12.5 mm*

with self sealing magnetic ball-valve

RIWO-ART trocar sleeves						
Instrument	WL	Inner Diameter	With Port	**Trocar,** blunt conical tip	**Trocar,** conical tip	**Trocar,** pyramidal tip
metal sleeve, standard straight distal tip	100 mm	12.5 mm	**8924.014**	**8924.103**	**8924.113**	**8924.123**
	150 mm	12.5 mm	**8924.016**	–	**8924.115**	**8924.125**
metal sleeve, standard oblique distal tip	100 mm	12.5 mm	**8924.013**	**8924.103**	**8924.113**	**8924.123**
metal sleeve with retaining thread straight distal tip	60 mm	12.5 mm	**8924.022**			**8924.121**
	150 mm	12.5 mm	**8924.026**	–	**8924.115**	**8924.125**

Vario Port reducer,
12.5 mm - 10 mm 8924.802

Replacement sealing caps, pkg of 12,
for Vario Port reducer, 10 mm.....89.08 RE

Vario Port reducer,
12.5 mm - 5.5 mm.....8923.802
(Also works as 12.5 mm-7 mm)

Replacement sealing caps, pkg of 12,
for Vario Port reducer, 5 mm.....89.02 BL

Replacement ball,
for RIWO-ART trocar sleeves, 7 - 12.5 mm 8923.901

Replacement O-rings, pkg of 10,
for RIWO-ART trocar sleeves, 7 - 12.5 mm 8923.951

Replacement sealing caps, pkg of 12,
for RIWO-ART trocar sleeves, 12.5 mm, blue .....89.09 BL

Trocar Sleeve, *15 mm*

with flap valve

Instrument	*WL*	Inner Diameter	Type
straight distal tip	100 mm	15 mm	**8943.60**
Dilation 10-15 mm rod and sleeve set			**8943.601**

Replacement sealing caps, pkg of 10,
for 15 mm trocar sleeve, gray 8943.602

Replacement valve door seals, pkg of 10,
for 8943.60 trocar sleeve.....8943.603

TROTEC

Trocars with automatic shielding function

Conical Tip
Conical tip dilates fascia for secure holding of the trocar sleeve in the abdominal wall.

Linear Tip
Linear blade provides for easy penetration of the abdominal wall, and minimizes fascial defect size.

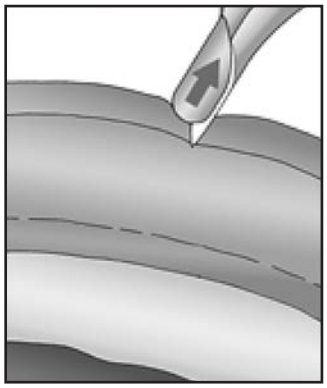

The shielding rod retracts automatically into the cannula when it makes contact with the abdominal wall.

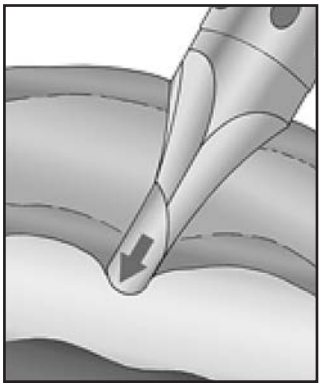

Immediately after penetrating the peritoneum, the shielding rod snaps back into the free abdominal cavity.

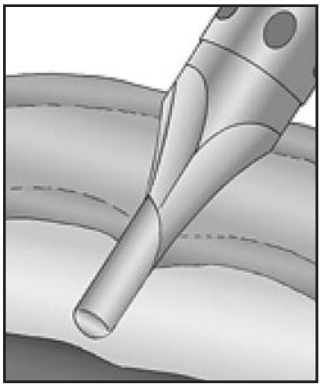

The extreme distal position of the atraumatic shielding rod covers the trocar tip after insertion.

TROTEC trocar consisting of:			For RIWO-ART trocar sleeves:		
Sheath with conical tip	Sheath with double-edged linear tip	Handle with spring-mounted rod	WL mm	Diameter mm	TROTEC trocar complete with sheath and spring rod
8921.132		**8923.135**	100	5.5	**8921.131**
	8921.134	**8923.135**	100	5.5	**8921.133**
8923.132		**8923.135**	100	10.0	**8923.131**
	8923.134	**8923.135**	100	10.0	**8923.133**
8924.132		**8923.135**	100	12.5	**8924.131**
	8924.134	**8923.135**	100	12.5	**8924.133**

Dilatation and Extraction Instruments

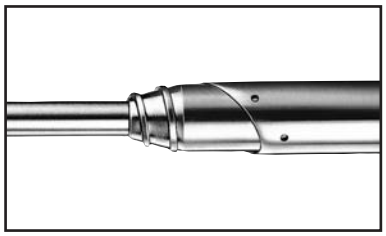

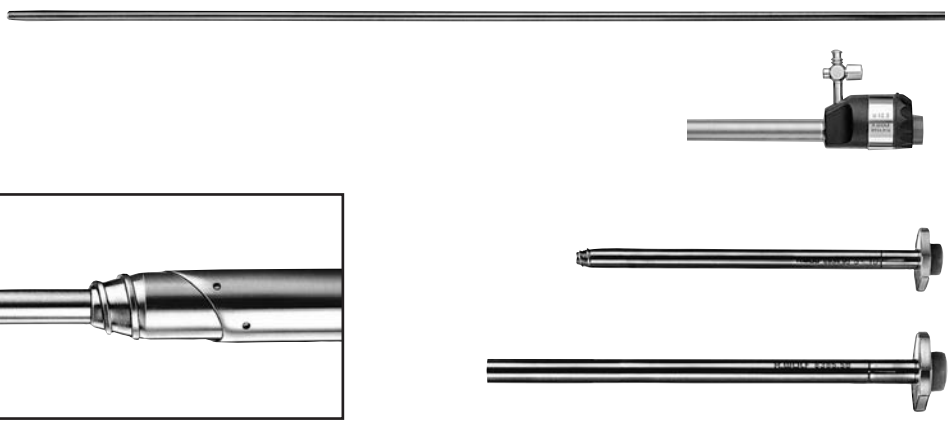

Guide rod

Trocar sleeves

Dilatation and guide sleeve

Instrument sleeve

To extend the puncture site from	**Guide rod**	**Trocar sleeve**	**Dilatation and guide sleeve**	**Instrument sleeve and extractor**
5.5 - 10 mm	**8934.951**	**8923.013**	**8934.95**	**8385.50***
10 -12.5 mm	**8943.901**	**8924.013**	**8924.931**	–

** for sealed application of 5 mm instruments in the 10 mm trocar sleeve and for extraction of the appendix.*

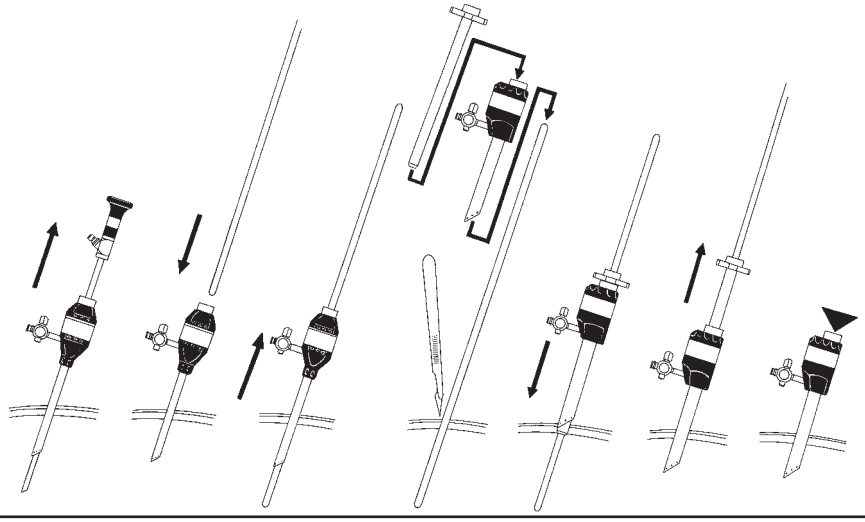

5.5 mm
to 10 mm

Dilatation and Extraction Instruments, *5-10 mm*

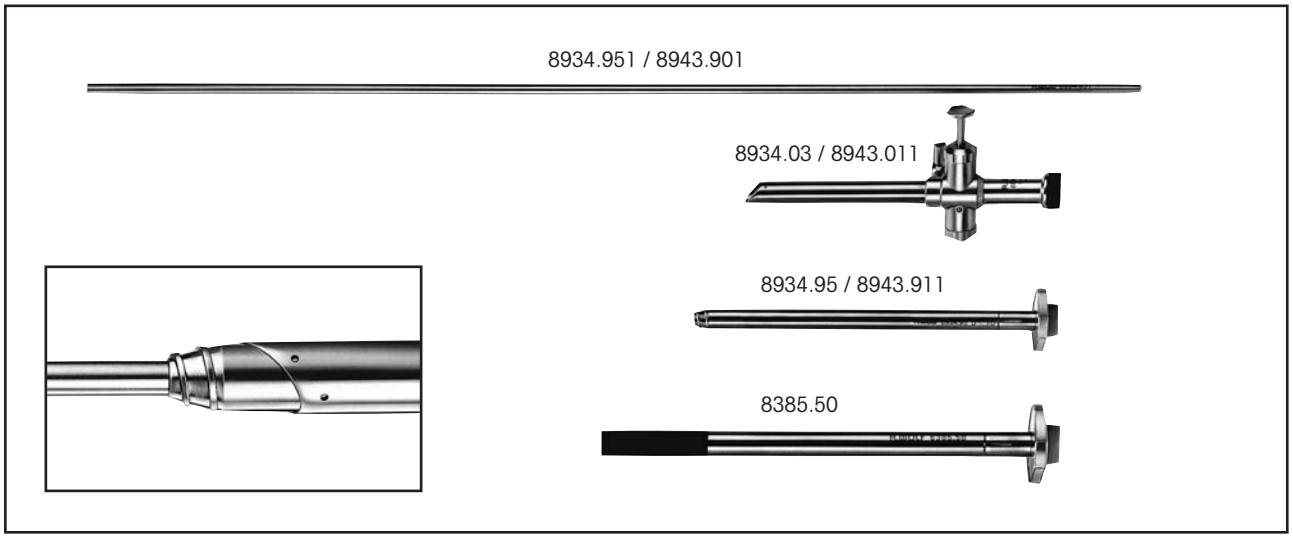

To expand the puncture site	**Guide rod**	**Trocar sleeve with trumpet valve**	**Dilatation and guide sleeve**	**Instrument sleeve and extractor**
5 -10 mm	**8934.951**	**8934.03**	**8934.95**	**8385.50***
10 -15 mm	**8943.901**	**8943.011**	**8943.911**	

*for sealed application of 5 mm instruments in the 10 mm trocar sleeve and for extraction of the appendix.

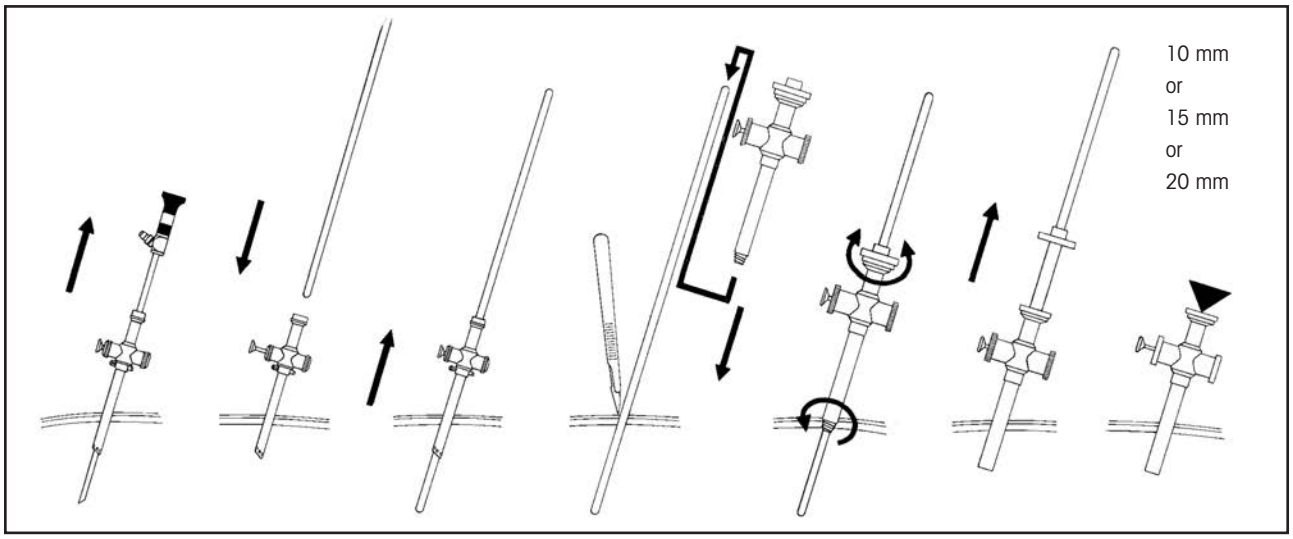

Reducing Sleeves and Adapters

for trocar sleeves

Description	Outer Diameter	Working Length	Inner Diameter	Type
10 / 5 mm **Instrument sleeve and extractor**	10 mm	170 mm	5 mm	**8385.50**
10 / 5 mm **Reducing sleeve**	10 mm	160 mm	5.5 mm	**8934.98**

Replacement sealing caps, pkg of 12,
for 5 mm instruments, blue.....89.02 BL
for 10 mm instruments, red .....89.08 RE

Description	Reduce form	To	Type
VARIO-PORT reducing adapter (pkg of 5)	12.5 mm Ø 10.0 mm Ø 7.0 mm Ø	5.5 mm Ø	**8923.802**
	12.5 mm Ø	10.0 mm Ø	**8924.802**

Fascial Closure System

for visualized full-thickness closure of trocar defects

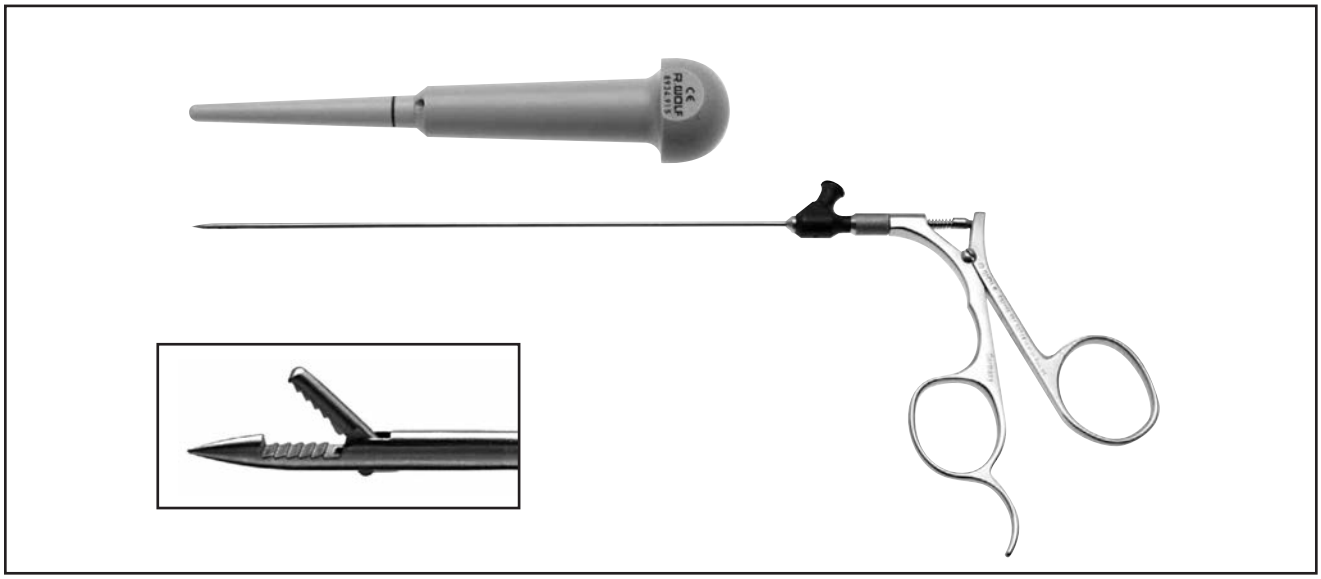

Extended tip of the guide allows easy insertion and preserves pneumoperitoneum
Marking on the guide indicates the position for placement of the ligature
Suture is grasped with the forceps and passed through the hole in the guide
Sutures are tied under direct visual control

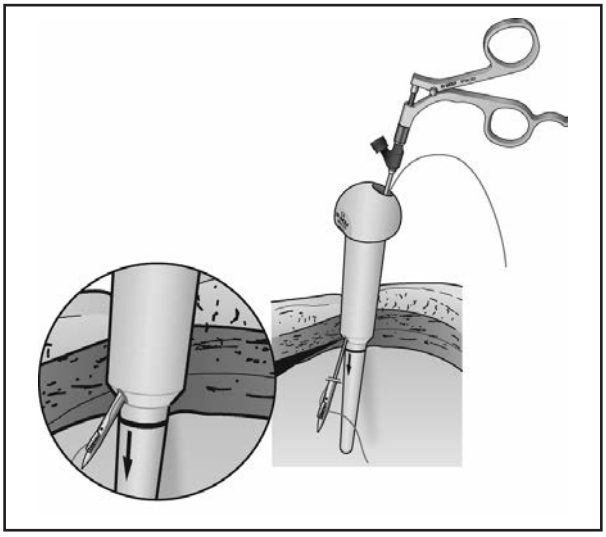

Fascial Closure Kit: **8756.205**

Closure guide 10-12 mm (8934.915), closure guide 12-15 mm (8943.915), closure guide 15-20 mm (8945.915), needle-tipped grasper (8756.201) and instrument tray for storage and sterilization (8585.091M)

Verres Needles

for establishing the pneumoperitoneum

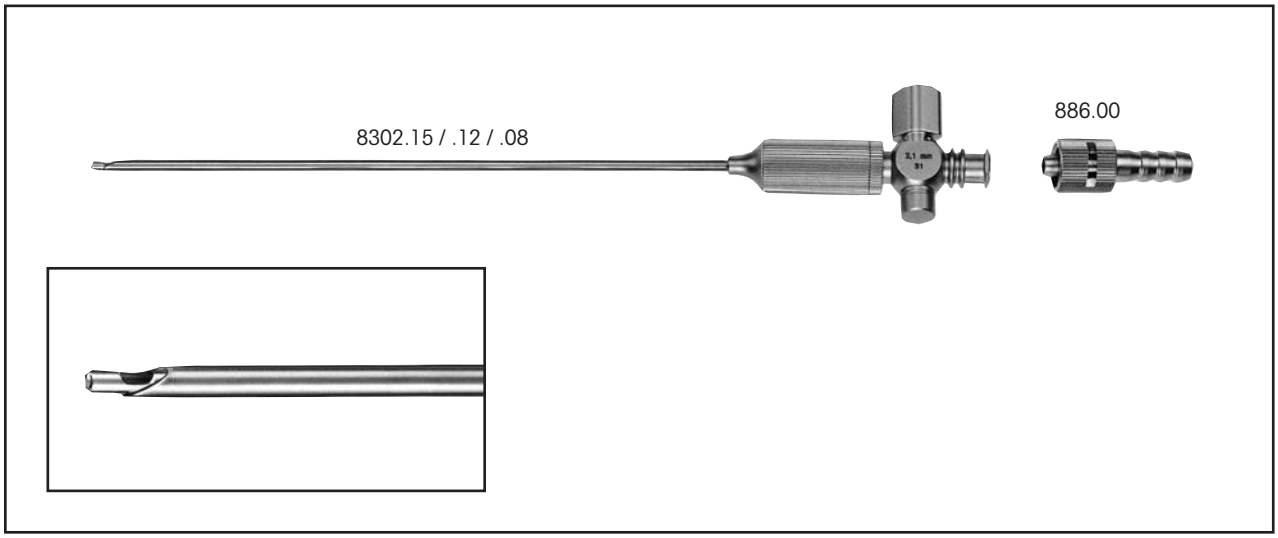

Verres Needles,
including detachable Luer lock connector (886.00),

150 mm working length 8302.15
120 mm working length (standard length) 8302.12
80 mm working length.....8302.08

Laparoscopic CO_2 Insufflator 2232

up to 30 L/min

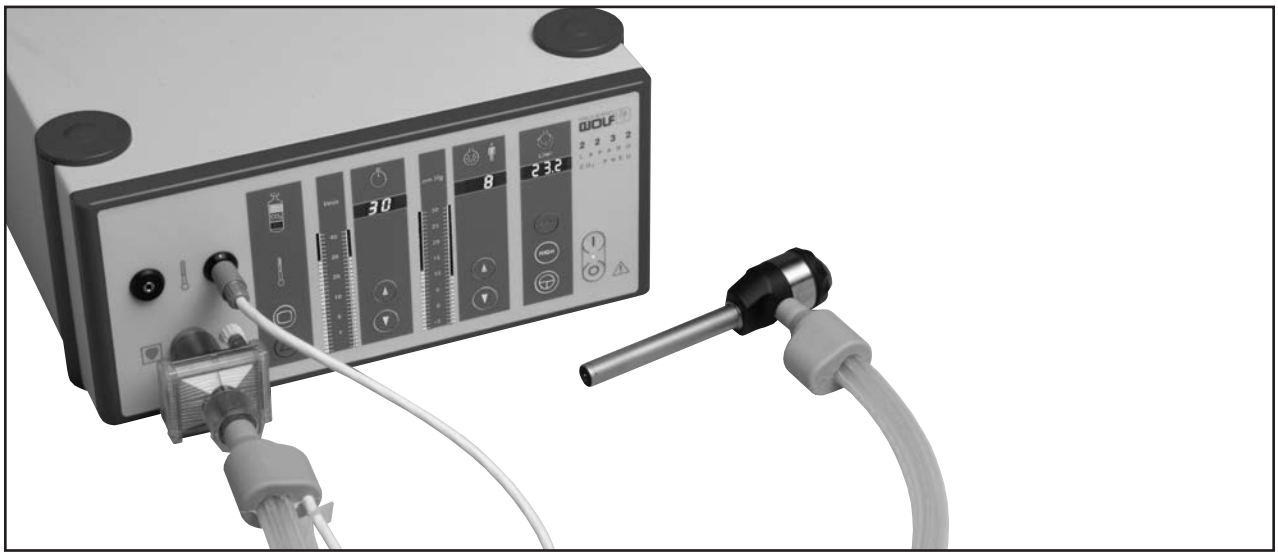

Laparoscopic CO_2 Insufflator
Included with insufflator:
CO_2 hose (2026.62), CO_2 yoke (2026.64),
power cord (N710154), 1 box of disposable
high-flow tubing (4170.512) 2232.601

Laparoscopic CO_2 Insufflator with electronic circuits for gas warming
Included with insufflator:
CO_2 hose (2026.62), CO_2 yoke (2026.64),
power cord (N710154), reusable insufflation tube
for gas warming (8170.201), 1 box of disposable
filters (4171.111), 1 box of disposable high-flow
tubing (4170.512) 2232.621

High-flow insufflation tubing
disposable, with high flow filter,
sterile, box of 10 .....4170.512

High-flow insufflation tubing for gas warming
reusable, autoclavable, 10ff. long 8170.201

Filters for gas warming tubing
disposable, sterile, box of 10 .....4171.111

CO_2 high pressure hose.....2026.62

CO_2 yoke.....2026.64

Universal tube set adapter 886.231

Verres Needle, 120mm WL.....8302.12

Verres Needle, 150mm WL.....8302.15

Please Note:
High-flow disposable tubing sets 4170.512 may be used on the 2232.621 unit when not using the gas warming feature.

Laparoscopic CO_2 Insufflator 2236

40 L/min

High-flow insufflation up to 40 liters/minute
Gas warming feature - warms CO_2 to body temperature
Variable flow rate for verres needle or trocar
Automatic over-pressure alarm

40 L/min Laparoscopic CO_2 Insufflator
Included with insufflator:
CO_2 hose (2026.62), CO_2 yoke (2026.64),
disposable high flow tubing with filter,
10/box (4170.512).....2236.6011

Accessories:
High-flow insufflation tubing
disposable, with high flow filter,
sterile, box of 10 .....4170.512
High-flow insufflation tubing for gas warming
reusable, autoclavable, 10ft. long 8170.201
Filters for gas warming tubing
disposable, sterile, box of 10 .....4171.111
CO_2 high pressure hose.....2026.62
CO_2 yoke.....2026.64
Universal tube set adapter 886.231
Verres Needle, 120mm WL.....8302.12
Verres Needle, 150mm WL.....8302.15

TEM Transanal Endoscopic Microsurgery

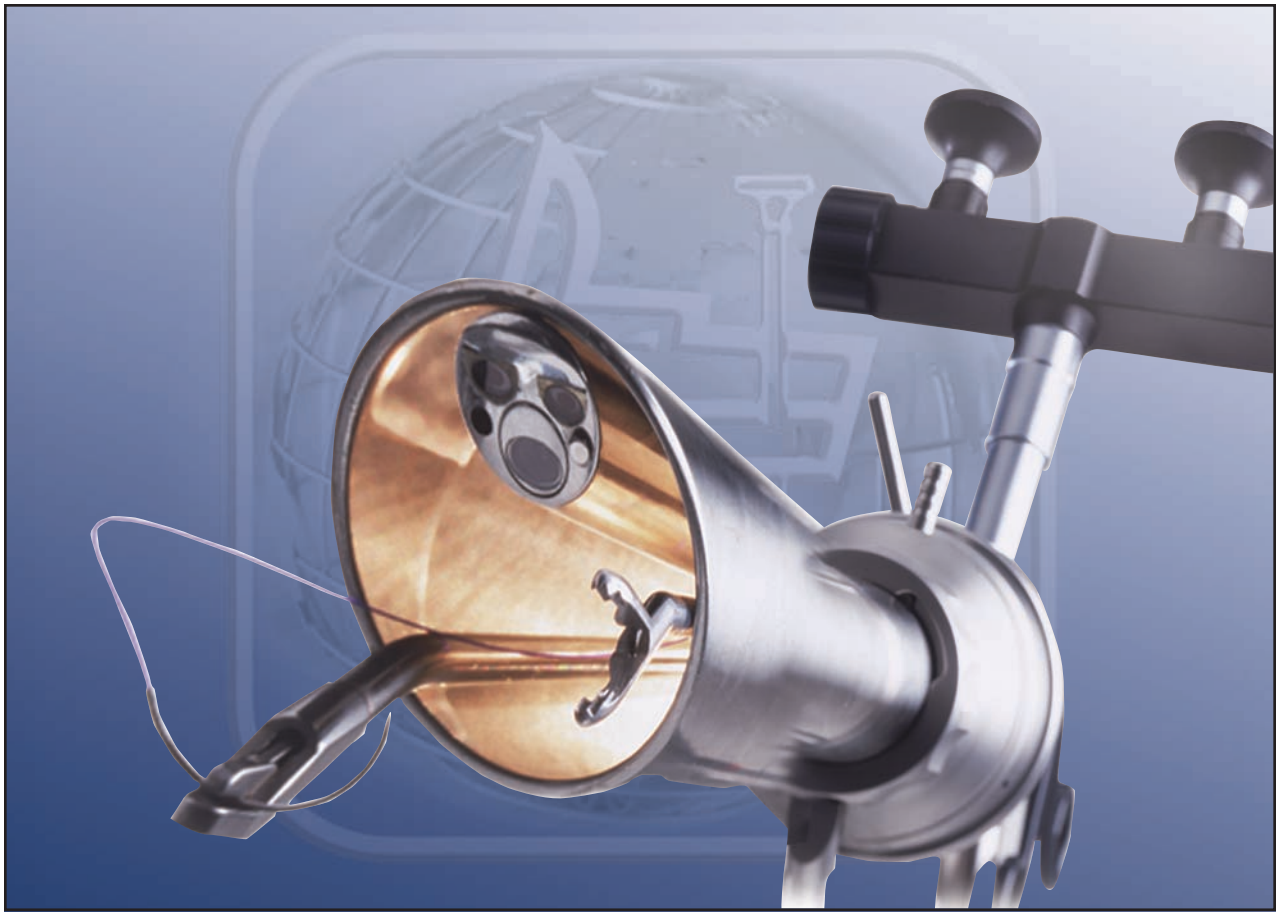

- TEM Scopes
- TEM Rectoscope Tubes
- TEM Forceps
- TEM Pump / Insufflator

Transanal Endoscopic Microsurgery

the minimally invasive solution

As an alternative to more radical abdominal surgery, Transanal Endoscopic Microsurgery (TEM) offers a **minimally invasive solution** for the excision of certain rectal polyps and early stage rectal cancers.

Pioneered in 1983 by German surgeon Dr. Gerhard Buess, TEM has revolutionized the resection of rectal lesions. Performed transanally with specially designed microsurgical instrumentation, TEM has made it possible to excise lesions high inside the rectum that otherwise would be accessible only by major abdominal surgery. The patient benefits of TEM as compared to radical abdominal surgery are clear: no major surgery, no large incision, no colostomy, less pain, faster recovery and shorter hospital stay.

Richard Wolf has worked closely with Dr. Buess to design and develop the instrumentation for TEM. The **Richard Wolf TEM Instrument System** allows access up to 20cm high within the rectum and provides controlled distention and excellent visibility for an optimal surgical environment. The unique stereoscope gives a magnified 3-D image for clear differentiation of tissue layers to ensure precise excision and suturing. The combination pump/insufflator unit is designed to maintain consistent distention of the rectum even during suctioning. Hand instruments are specially angled for precise maneuvering within the rectoscope tubes.

The complete **Richard Wolf TEM Instrument System** is designed to give the surgeon the precision instruments he needs to achieve successful outcomes with Transanal Endoscopic Microsurgery.

Telescopes

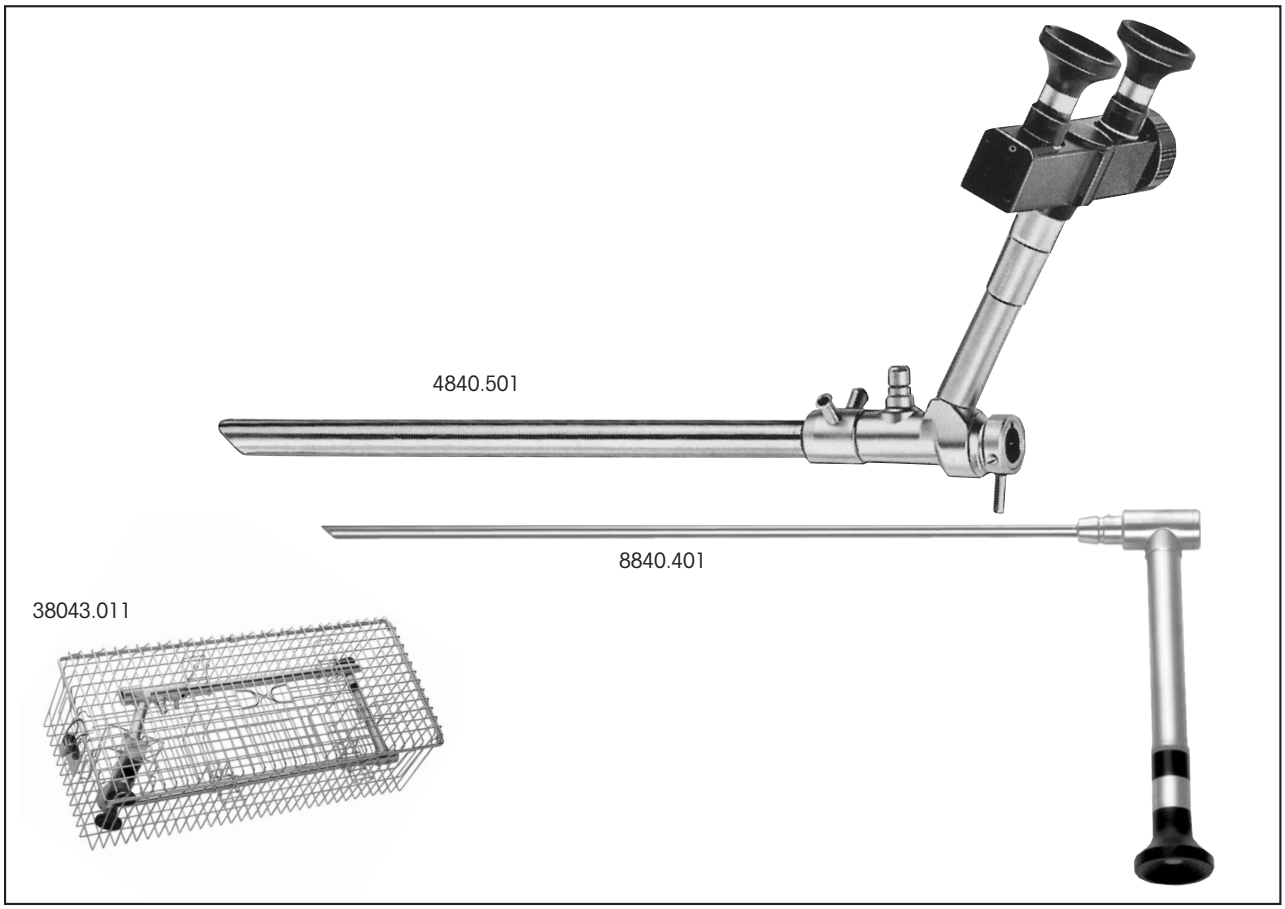

Stereo Scope
for direct visualization, 3D imaging, 6X magnification, 13.8mm OD, 50° angle of view, 75° field of view, non-autoclavable 4840.501

Documentation Scope
for use with endocam for monitor viewing, 6.6mm OD, 40° angle of view, autoclavable 8840.401

Fiberoptic Light Cable,
4.5mm bundle, 3M WL 8061.0456

Instrument Tray,
to accommodate stereo scope and documentation scope for storage and sterilization 38043.011

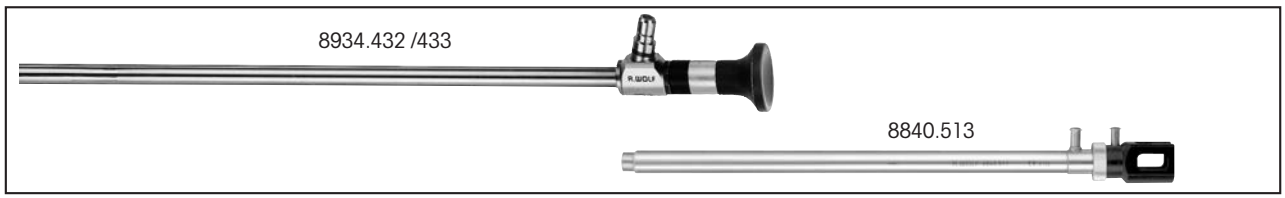

10mm Laparoscope and Sheath (an alternative to stereo/documentation scopes)

10mm Laparoscope
Panoview Plus, 300mm WL
30° angle of view 8934.432
50° angle of view 8934.433

Fiberoptic Light Cable,
4.5mm bundle, 3M WL 8061.0456

Rinsing/Insufflation Sheath
used with 10mm laparoscope for TEM, with channels for rinsing and insufflation, 13.8mm OD, 260mm WL 8840.513

Rectoscope Tubes

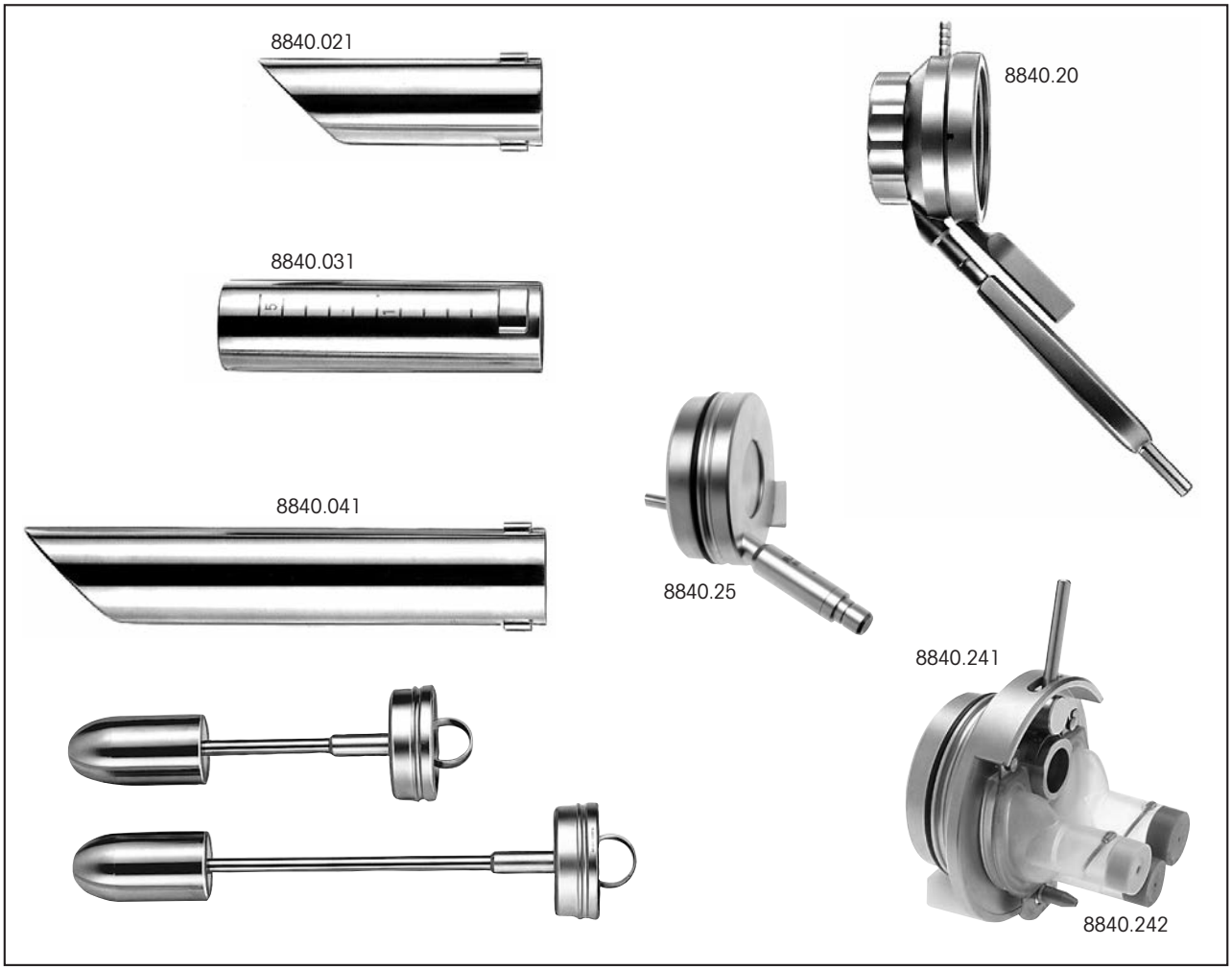

Handle and Bridge Assembly 8840.20

Rectoscope Tube,
including obturator,
outer diameter 40 mm,
120 mm long, oblique edge 8840.021
137 mm long, flat edge 8840.031
200 mm long, oblique edge 8840.041

Viewing window 8840.25

Working Faceplate
attaches to 8840.20, includes silicone sealing insert.....8840.241

Replacement Silicone Sealing Inserts
pkg / 3, includes bag of assorted sealing caps 8840.242

Replacement Sealing Caps
for silicone sealing insert:
fits left and center ports
No hole, ...red .....89.20 RE
3mm to 5mm, ...blue.....89.02 BL
5mm to 6mm, ...grey.....89.03 GY

fits right (larger size) port
No hole, ...red .....89.21 RE
4mm to 6mm, ...red.....89.141

Replacement Sealing Cap
for backside of faceplate:
13 mm to 14 mm, ...red .....89.10 RE

Grasping Forceps, monopolar

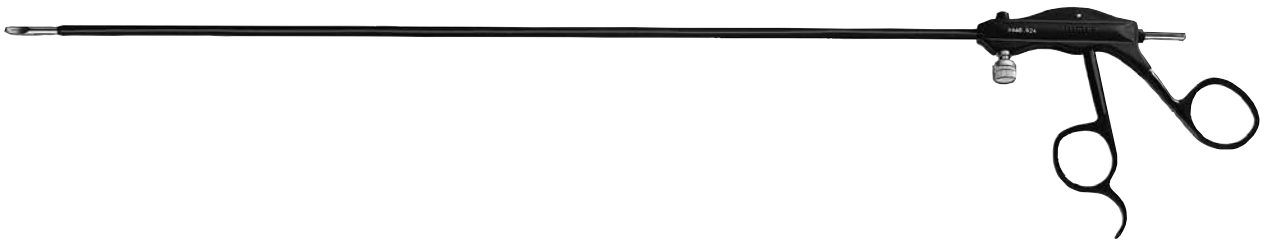

	Outer Diameter	Working Length	Code
HF grasping forceps, angled downwards and curved right, for left hand	4.6 mm	405 mm	**8840.621**
HF grasping forceps, angled downwards and curved left, for right hand	4.6 mm	405 mm	**8840.622**
HF grasping forceps, straight and curved right, for left hand	4.6 mm	405 mm	**8840.623**
HF grasping forceps, straight and curved left, for right hand	4.6 mm	405 mm	**8840.624**

HF connecting cable

Wolf to Valley Lab 10 ft. reusable 8106.033

Wolf to Valley Lab 10 ft., sterile disposable, pkg / 10.....4106.0330

Scissors

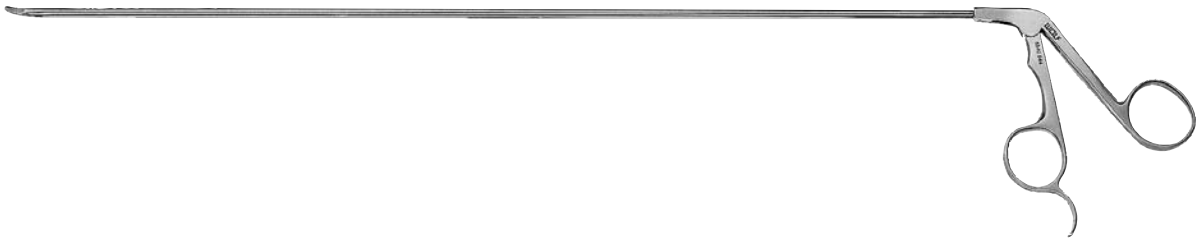

	Outer Diameter	Working Length	Code
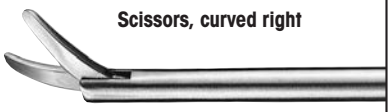 **Scissors, curved right**	4.6 mm	405 mm	**8840.643**
Scissors, curved left	4.6 mm	405 mm	**8840.644**

Knife, monopolar

for marking and dissecting

		Outer Diameter	Working Length	Code
needle tip with ceramic insulation	**curved left, for right hand**	4 mm	425 mm	**8840.711**
	curved right, for left hand	4 mm	425 mm	**8840.712**

HF connecting cable
Wolf to Valley Lab 10 ft. reusable 8106.033
Wolf to Valley Lab 10 ft., sterile disposable, pkg / 10.....4106.0330

Needle Holders*

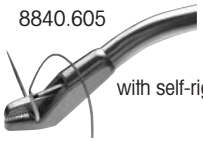

	Outer Diameter	Working Length	Code
Needle holder, self-righting angled downwards	4.6 mm	405 mm	**8840.605**
Needle holder straight	4.6 mm	405 mm	**8840.604**

*recommended suture 3.0 PDS with SH needle

Suture Clip Forcep

	Outer Diameter	Working Length	Code
Suture clip forcep (with clip ejector 8840.763)	6 mm	405 mm	**8840.762**
Suture clips, pure silver sterile packets w/6 clips, box/10 packets			**4840.765**

Suction Tube

		Outer Diameter	Working Length	Code
Coagulation suction tube	**curved right**	6 mm	470 mm	**8840.731**

HF connecting cable
Wolf to Valley Lab 10 ft. reusable 8106.033
Wolf to Valley Lab 10 ft., sterile disposable, pkg / 10.....4106.0330

Retractable Needle

	Outer Diameter	Working Length	Code
Retractable Needle 25 gauge	4 mm	325 mm	**8840.74**

U-shaped Support Arm

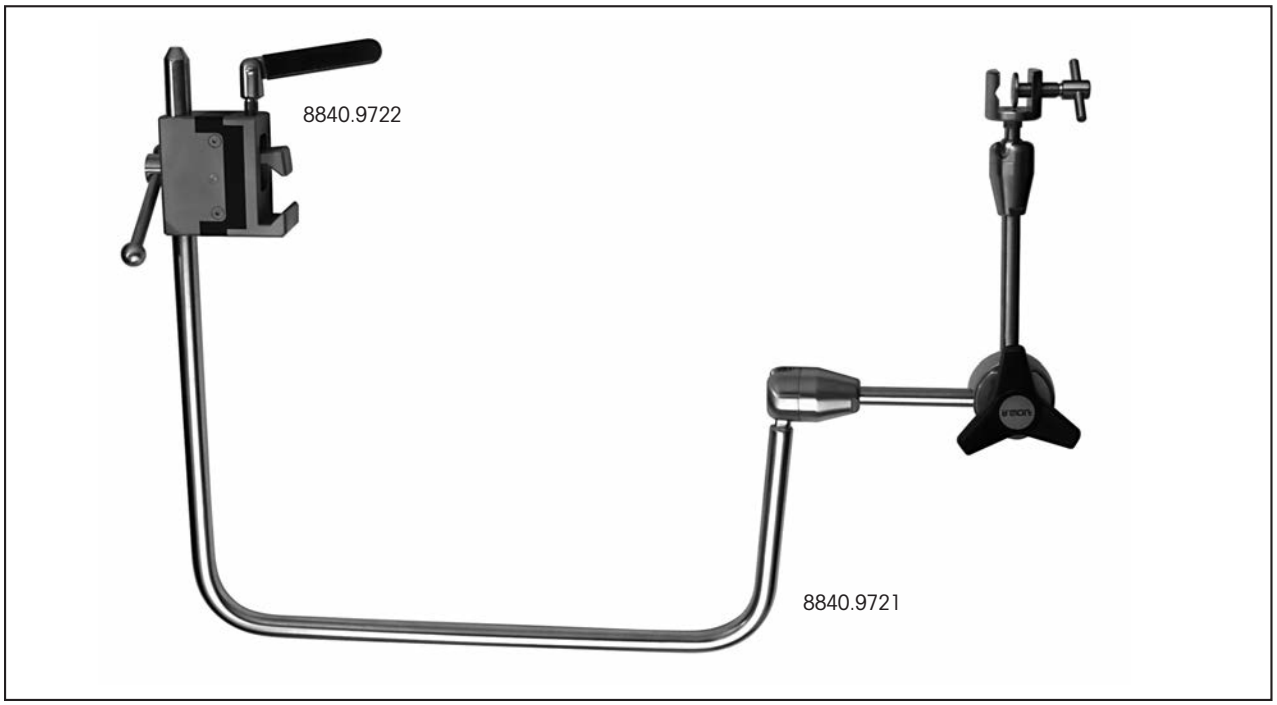

U-shaped Support Arm
with special clamping device to position and stabilize the handle/bridge assembly 8840.9721

Universal Mounting Block
mounts 8840.9721 to operating bed (standard rail) 8840.9722

Instrument Tray
for U-shaped support arm and mounting block, metal construction, 16"L x 17"W x 5"H 8585.026

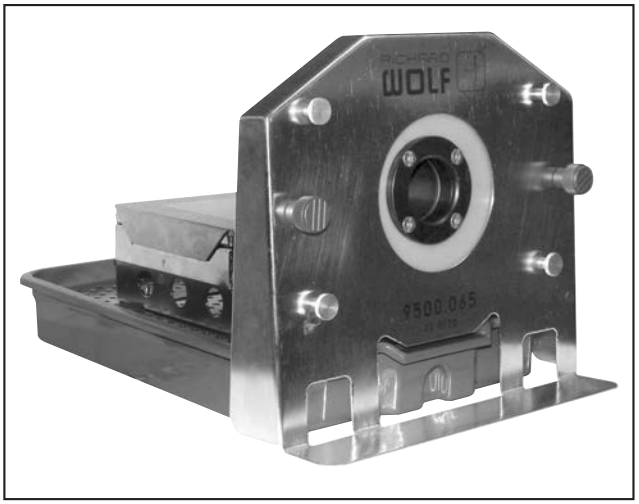

TEM Trainer
for simulation and technique practice of the Transanal Endoscopic Microsurgery procedure. Accommodates both animal tissue specimens and inanimate tissue models. Includes clamps for securing trainer to table top 9500.065

TEM Combination System 2232

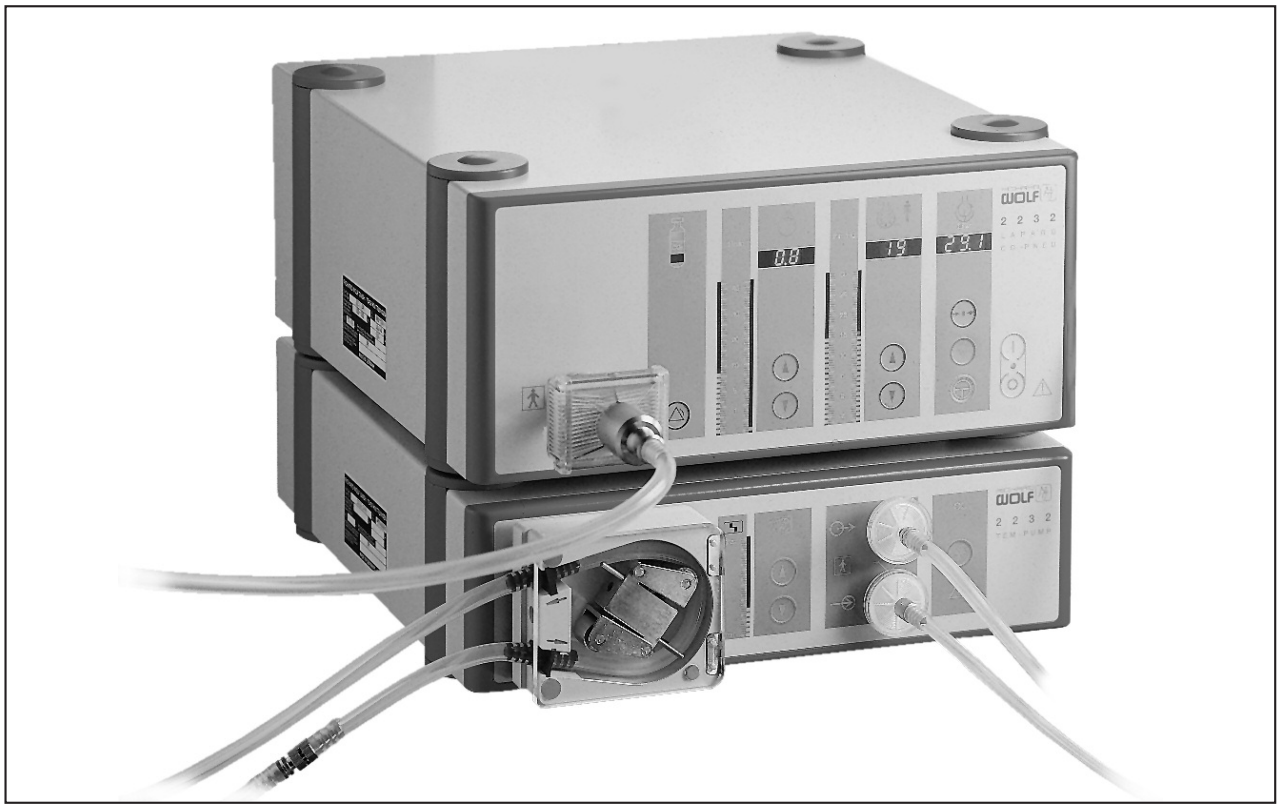

TEM Combination System 2232
Comprised of: TEM CO2 Pneu Insufflator (2232.641); TEM Pump (2232.644); irrigation bottle bracket (2232.841); footswitch (2030.231); TEM disposable kit (4170.811) x 2 .....2232.211

TEM Irrigation Bottle Connector
for Baxter, Abbott/Hospira and McGaw irrigation bottles 8383.951

TEM Cart
2 shelves plus drawer, CO2 tank brackets, power strip,
24"W x 22"D x 35"H 41066.3109

TEM Disposables and Accessories

	Product Number	Description
	4170.811	TEM Disposables Kit, includes: (1) Tubing set, sterile (1) Hand blower, sterile, latex-free (1) Suture clips, sterile, pack / 6 clips single-use, one kit per procedure
	4840.765	Suture clips, sterile, single-use, 6 clips per pack, box / 10 packs
	127.0005	Hand Blower, sterile, latex-free, single-use, box / 5
	4170.801	TEM Tubing Set, sterile, single-use, for one procedure
Sealing Caps	**89.02 BL**	Blue, 3mm - 5mm, for left port on silicone sealing insert, bag/12
	89.03 GY	Grey, 5mm - 6mm, for center port on silicone sealing insert, bag/12
	89.141	Red, 4mm - 6mm, for right (larger sized) port on silicone sealing insert, bag/10
	89.10 RE	Red, 13mm - 14mm, for backside of faceplate, bag/12
O-Rings	**N160044**	Black O-Ring, for inside of Baxter (8383.952) and Abbott/Hospira (8383.953) bottle adapters
	N120030	Red O-Ring, for inside of McGaw (8383.951) bottle adapters
	15364.067	Large Black O-Ring for faceplate 8840.241
	8585.021	Instrument Tray For storage and sterilization of rectoscope tubes, handle/bridge assembly, faceplate, hand instruments and accessories. Metal construction 27"L x 11"W x 8"H
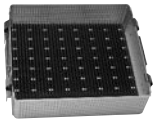	**8585.026**	Instrument Tray for storage and sterilization of U-shaped support arm and clamp. Metal construction 16"L x 17"W x 5"H
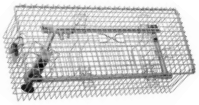	**38043.011**	Stereoscope Tray For storage and sterilization of stereoscope 4840.501 Also holds documentation scope 8840.401 Metal construction 18"L x 8"W x 6"H
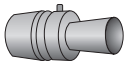	**8840.591**	Sealing Cone, to seal documentation scope port on stereoscope 4840.501 when the documentation scope is not used

Complete Set

for Transanal Endoscopic Microsurgery (TEM)

Item #	Product	Recommended Qty.
8840.20	Basic element (primary handle and bridge)	1
8840.021	Rectoscope tube w / obturator 40mm dia., 120mm length, oblique edge	1
8840.031	Rectoscope tube w / obturator 40mm dia., 137mm length, flat edge	1
8840.041	Rectoscope tube w / obturator 40mm dia., 200mm length, oblique edge	1
8840.25	Adapter w / viewing window and illumination insert	1
8840.241	Working faceplate for endoscope and instruments	1
8840.242	Sealing sleeves, silicone, pkg / 3	2
4840.501	Stereo endoscope, 50°	1
8840.401	Documentation endoscope for video, 40°	1
8840.9721	Articulated instrument support arm	1
8840.9722	Clamping device for attachment of instrument support arm to operating table	1
8840.731	Coagulating / aspirating tube, 47cm long	1
8840.711	High frequency knife, curved left, for right hand	2
8840.712	High frequency knife, curved right, for left hand	1
8840.624	High frequency grasper, straight, curved left, for right hand	1
8840.623	High frequency grasper, straight, curved right, for left hand	1
8840.622	High frequency grasping, angled down, curved left, for right hand	1
8840.621	High frequency grasping, angled down, curved right, for left hand	1
8840.604	Needle holder, straight	2
8840.605	Needle holder, angled downwards	2
8840.74	Retractable needle	1
8840.643	Scissors, right curved	1
8840.644	Scissors, left curved	1
8840.762	Suture clip forceps	2
8106.033	High frequency connecting cable, Wolf to Valleylab generator (Bovie)	1
8061.0456	Fiber light cable, 4.5mm, 10ft.	1
8383.951	Irrigation bottle adapter	1
2232.211	TEM Combination System, Pump and CO2 Pneu Insufflator	1
9500.065	TEM Trainer System	1
8585.021	Sterilization and storage tray for hand instruments and rectoscope tubes	2
8585.026	Sterilization and storage tray for support arm and clamp	1
38043.011	Sterilization and storage tray for stereo and documentation scopes	1
41066.3109	Cart, 2 shelves plus drawer, 24"W x 22"D x 35"H	1
4170.811	TEM Disposables Kit, includes tubing set, hand blower, packet of suture clips	5
4840.765	Suture Clips, sterile, 6 clips per packet, box/10 packets	1
127.0005	Hand blower, latex-free, disposable, sterile, box/5	1

Thoracoscopy / Mediastinoscopy

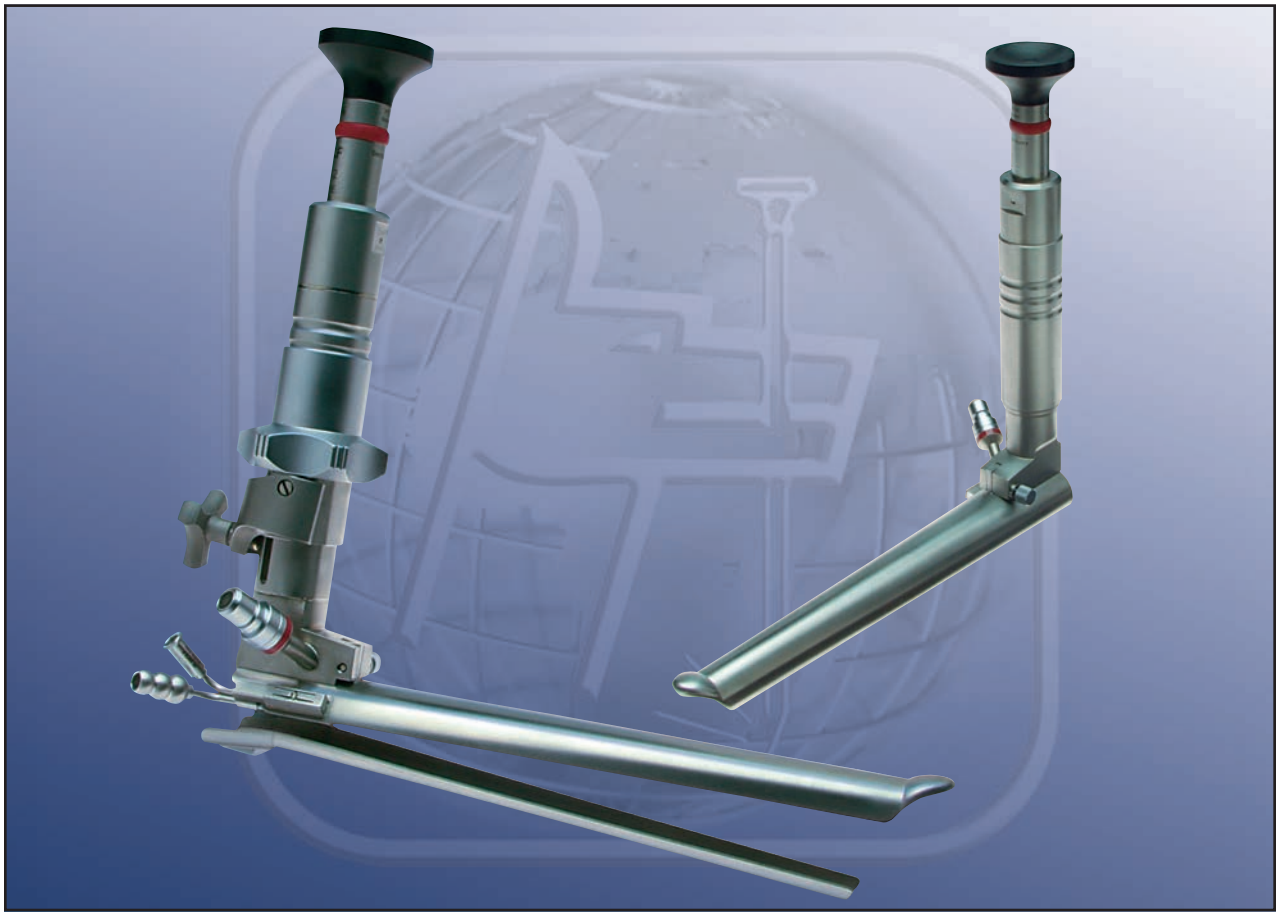

- Thoracoscopes
- Trocars
- Forceps and Cannulas
- Mediastinoscopes
- Forceps for Mediastinoscopy

Telescopes, *7 mm*

HD compatible

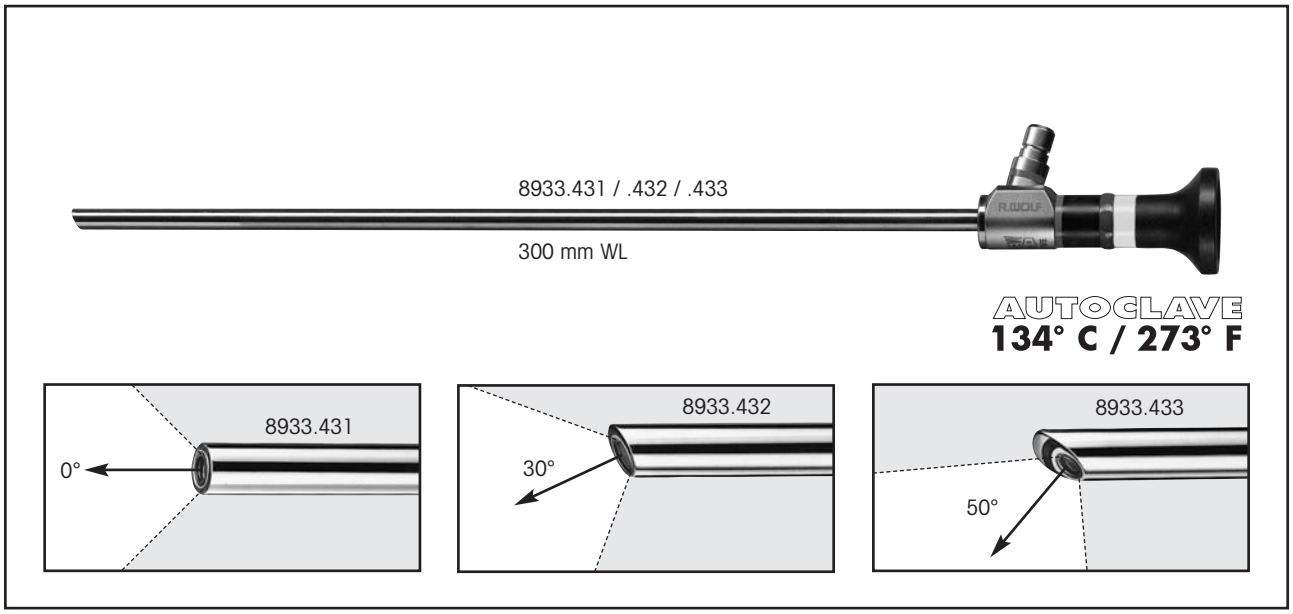

PANOVIEW PLUS telescope, Ø 7 mm,
distortion-free,

0° 8933.431
30° 8933.432
50° 8933.433

Telescopes, *10 mm*

HD compatible

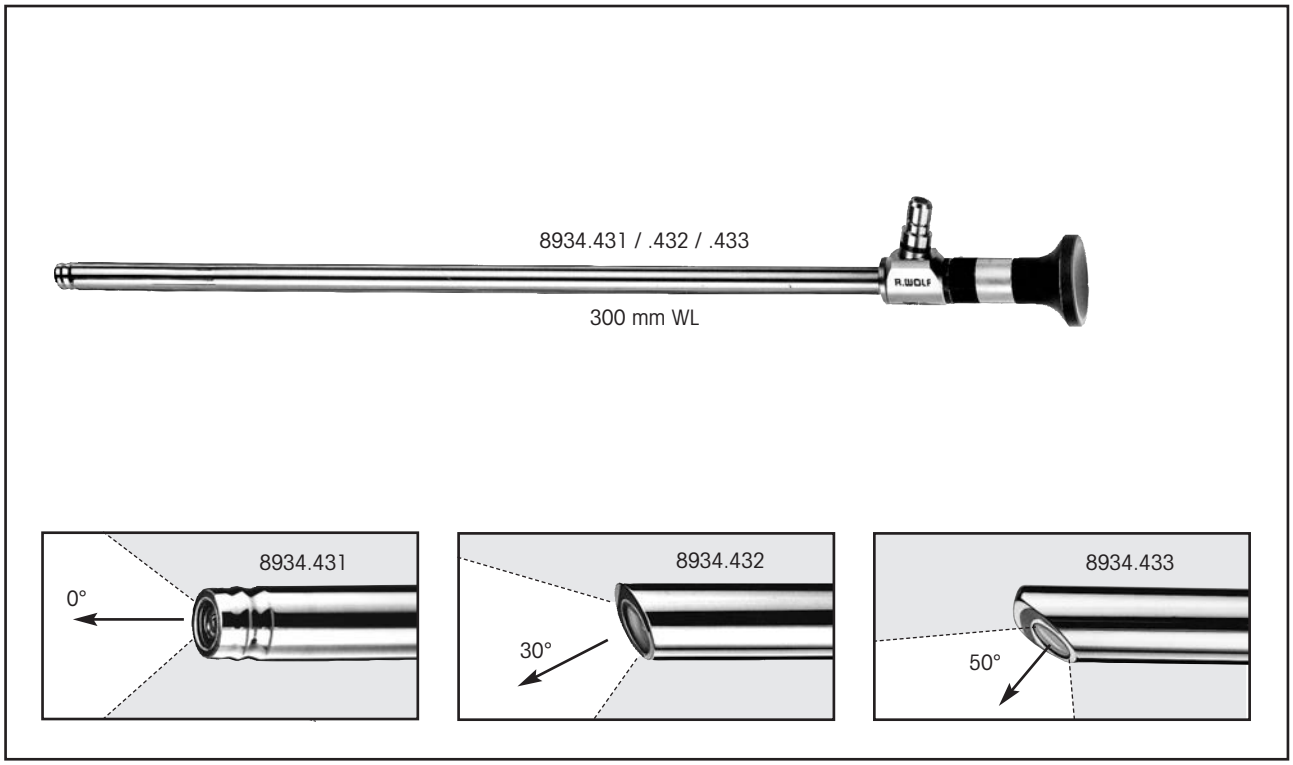

PANOVIEW PLUS laparoscope, 10 mm diameter,
HD camera compatible

0°.....8934.431
30°.....8934.432
50°.....8934.433

Fiberoptic light cable

4.5 mm bundle, 3M WL.....8061.0456

Autoclavable
134°C / 273°F
Pre-Vac Cycle

Operating Laparoscope, *10 mm*

5mm working channel, right-angle eyepiece

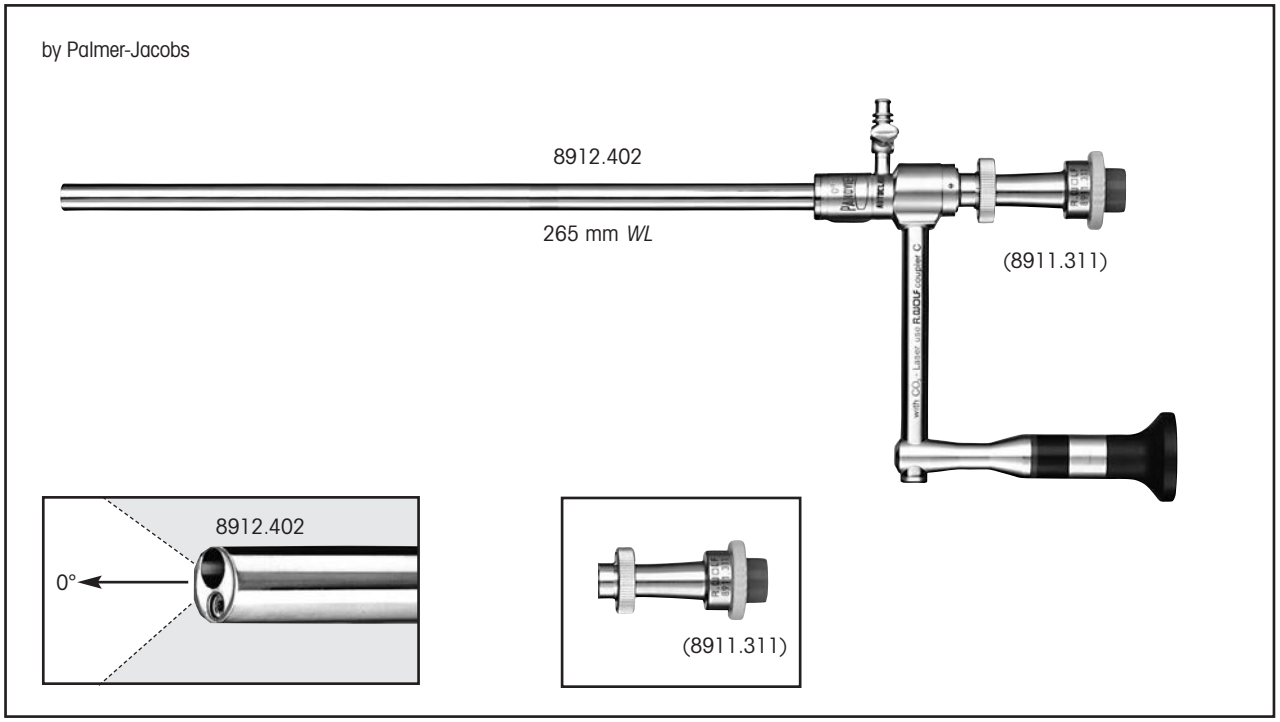

PANOVIEW PLUS operating laparoscope, 10 mm, ø
with right angle eyepiece,
5 mm working channel
with detachable automatic sealing port (8911.311),
0° 8912.402

For automatic sealing valve (8911.311):
Replacement sealing caps,
blue, 12/pkg. 89.02BL
Spare membrane valves,
pack of 10 .....89.103
plastic housing for sealing cap 15176.097

Optional:
Detachable instrument port with stopcock.....8911.316

Fiber optic light cable,
3.5 mm bundle, 3M WL.....8061.0356

Operating Laparoscope, *10 mm*

5 mm working channel, 45° offset eyepiece

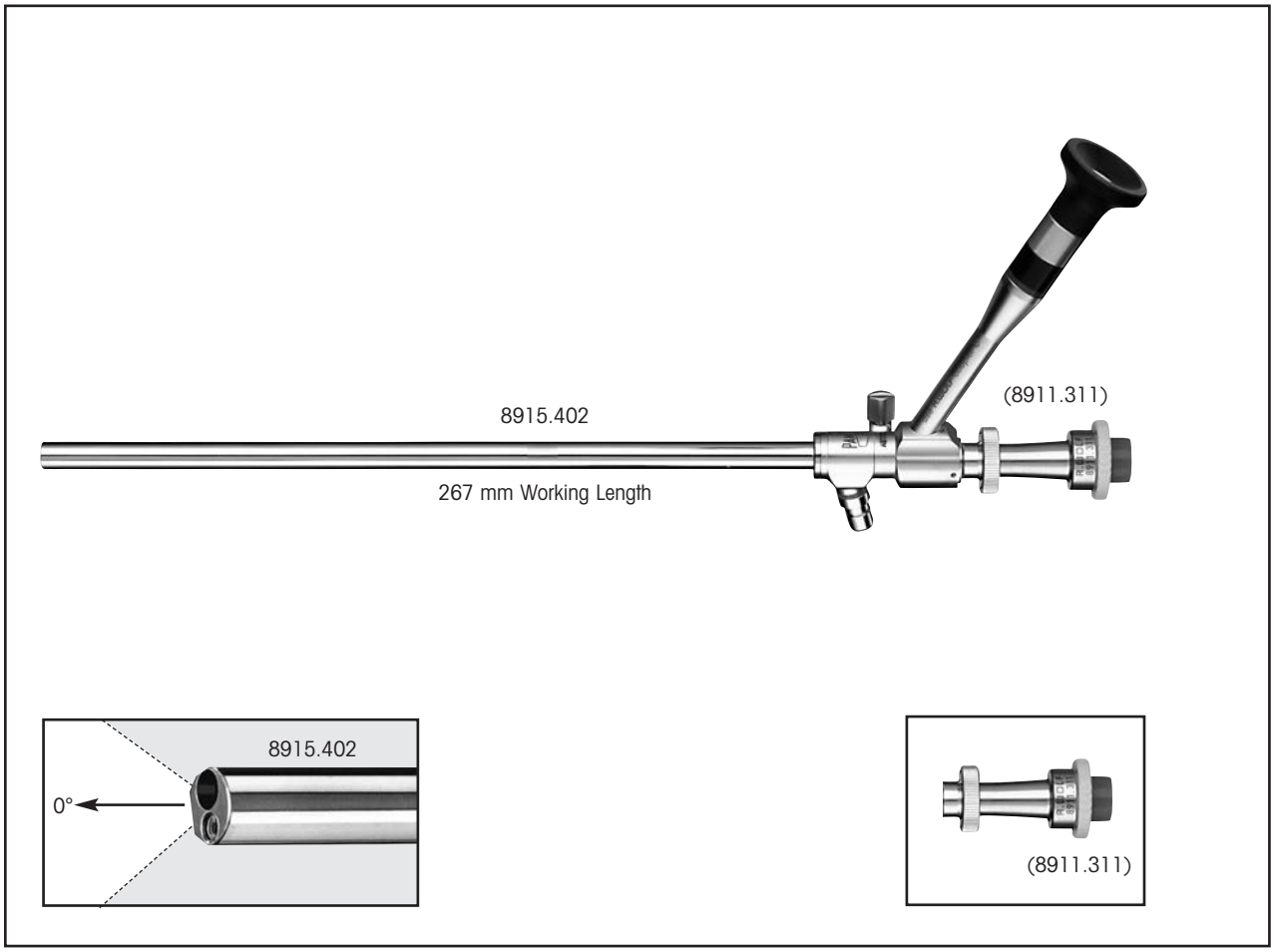

PANOVIEW PLUS operating laparoscope, 10 mm diameter,
with fixed eyepiece,
with obliquely offset eyepiece, 5 mm working channel
with detachable automatic sealing port (8911.311)
0° 8915.402

For automatic sealing valve (8911.311):
Replacement sealing caps,
blue, 12/pkg. 89.02BL
Spare membrane valves,
pack of 10 .....89.103

Optional:
Detachable instrument port with stopcock.....8911.316

Fiberoptic light cable,
3.5 mm bundle, 3M WL.....8061.0356

Trocar Sleeves, *5.5 mm*

Flexible trocar sleeve, plastic	WL	Capacity	Type	**Trocar,** *blunt, conical tip*
oblique distal tip	75 mm	5.5 mm	**8906.051**	**8906.151**

Trocar sleeve of insulating material	WL	Capacity	Type	**Trocar,** *blunt, conical tip*
straight distal tip	75 mm	5.5 mm	**8906.052**	**8906.151**

Trocar Sleeves, *7 mm*

Flexible trocar sleeve, plastic	WL	Capacity	Type	**Trocar,** *blunt, conical tip*
straight distal tip	75 mm	7 mm	**8906.001**	**8913.11**

Trocar sleeve with lateral tap, metal	WL	Capacity	Type	**Trocar,** *blunt, conical tip*
straight distal tip	75 mm	7 mm	**8913.01**	**8913.11**

Trocar Sleeves, *10 mm - 18 mm*

Flexible trocar sleeve, plastic	WL	Capacity	Type	**Trocar,** *blunt, conical tip*
straight distal tip	60 mm	10 mm	**8906.011**	**8906.111**

Flexible trocar sleeve, plastic	WL	Capacity	Type	**Trocar,** *blunt, conical tip*
straight distal tip	60 mm	12.5 mm	**8906.031**	**8906.131**

Trocar sleeve, metal, oval	WL	Capacity	Type	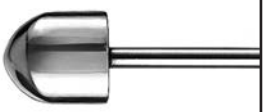 **Trocar,** *blunt, conical tip*
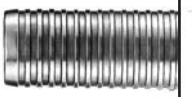 *straight distal tip*	55 mm	13.6 / 18 mm	**8906.081**	**8906.181**

Probes

	Ø	*WL*	Type
Probe, *graduated*	7 mm	450 mm	**8243.901**

8242.951

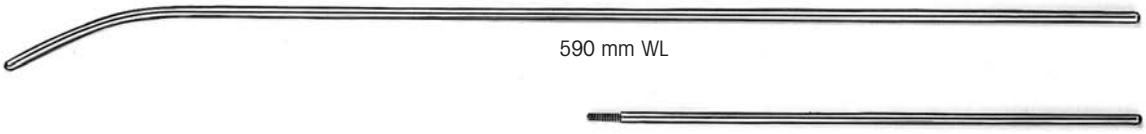

590 mm WL

	Ø	*WL*	Type
Guide Probe, *for thorax drainage*	4 mm	590 mm	**8242.951**

	Ø	*WL*	Type
Dissector, *curved*	7 mm	450 mm	**8243.502**

Rigid Optical Biopsy Forceps, *5 mm*

	WL	Type
Rigid optical biopsy forceps, *with double-spoon jaws*	295 mm	**8913.60**

for
PANOVIEW PLUS telescope,
Ø 4 mm, 0°.....8650.414

Sponger, *5 mm*

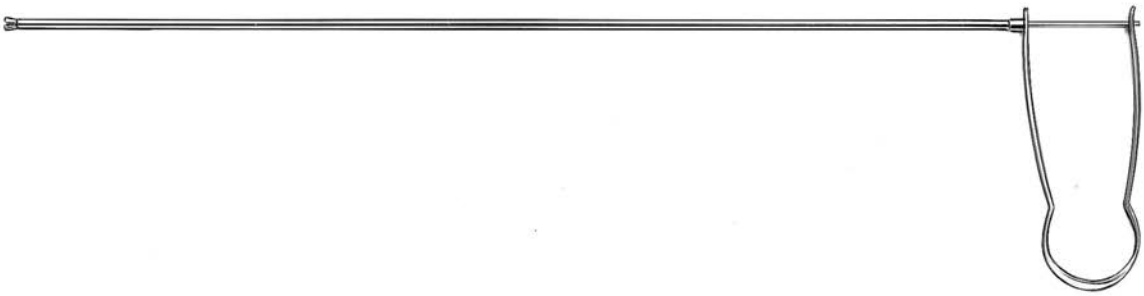

	WL	Type
Sponger	300 mm	**8148.02**

Bipolar Forceps, *5 mm*

Jaw insert		*Sliding sleeve*	*Outer tube*	*Spring handle*	**Complete instrument** • Jaw insert • Sliding sleeve • Outer tube • Spring handle
		WL 300 mm	*WL* 300 mm		
	Types	8393.923	8393.925	8393.975	Types
Bipolar coagulation forceps	8393.726	●	●	●	**8393.793**

Spare parts:

Rubber cap *88.03*

Luer sealing cap *887.00*

Parenchyma Forceps, *5 mm*

by Linder

	WL 260 mm	Type
Parenchyma forceps, *30 mm curved left*	•	**8242.601**
Parenchyma forceps, *30 mm curved right*	•	**8242.602**
Parenchyma forceps, *50 mm curved left*	•	**8242.603**
Parenchyma forceps, *50 mm curved right*	•	**8242.604**

Artery Forceps, *5 mm*

by Linder

	WL 270 mm	Type
Artery forceps, *curved left*	•	**8242.651**
Artery forceps, *curved right*	•	**8242.652**
Lung grasping forceps	•	**8242.611**

Tissue Retractor, *7 mm*

	WL 320 mm	Type
Tissue retractor, *curved*	•	**8243.701**

Powder Spray

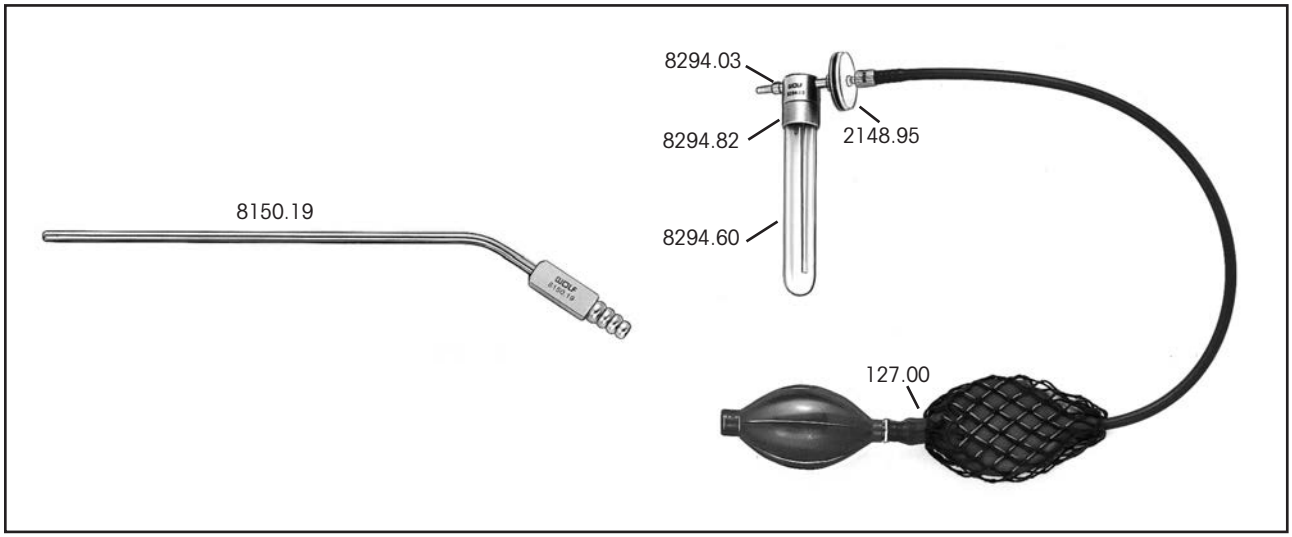

For spraying fine powders:

Diffuser *8294.03*

Collar for diffuser *8294.82*

Disposable containers,
pack of 100.....*8294.60*

Disposable membrane filter, *sterile,*
pack of 50 .....*2148.95*

Aspiration tube, *Ø 3 mm,*
100 mm long *8150.19*

Double hand bulb *127.00*

Stoppers for disposable containers
(for sending specimens), pack of 100.....*294.61*

Pleural Abrader

	Ø	WL	Type
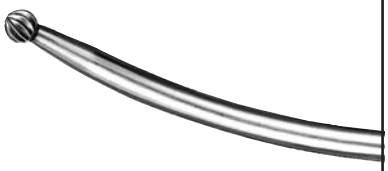 **Pleural abrader**	4.5 mm	500 mm	**8294.701**

Injection Cannulas, *5 mm*

	Ø	WL	Type
Injection cannula, *Ø 0.7 (tip)*	5 mm	330 mm	**8383.60**
Injection and puncture cannula, *Ø 1.8 mm (15 G)*	5 mm	for operating thoracoscopes with instrument channel 450 mm	**8384.65**

Suction Tube, *5 mm*

	Ø	*WL*	Type
Aspiration tube, *graduated*	5 mm	450 mm	**8384.68**

Electrodes, monopolar, *5 mm*

	WL	Type
Hook electrode, *curved*	340 mm	**8242.301**

HF connecting cable
for Valleylab, reusable 8106.033

	WL	Type
Button electrode	330 mm	**8383.40**

HF connecting cable
for Valleylab, reusable 815.033

Needle Holder, *5 mm*

	WL 300 mm	Type
Needle holder, *curved*	•	**8242.451**
Needle holder, *straight*	•	**8383.533**

Knot Pusher, *5 mm*

by Linder

	WL	Type
Knot pusher, *curved*	240 mm	**8243.461**

Pleural Needle, 2.8 mm

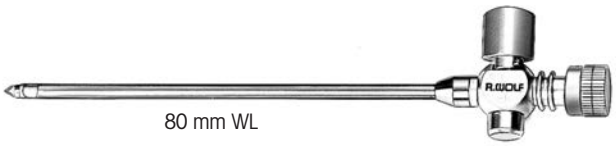

80 mm WL

Pleural needle *by Boutin,*
capacity 2 mm.....8294.751

Video Mediastinoscopes with integrated high-performance optics

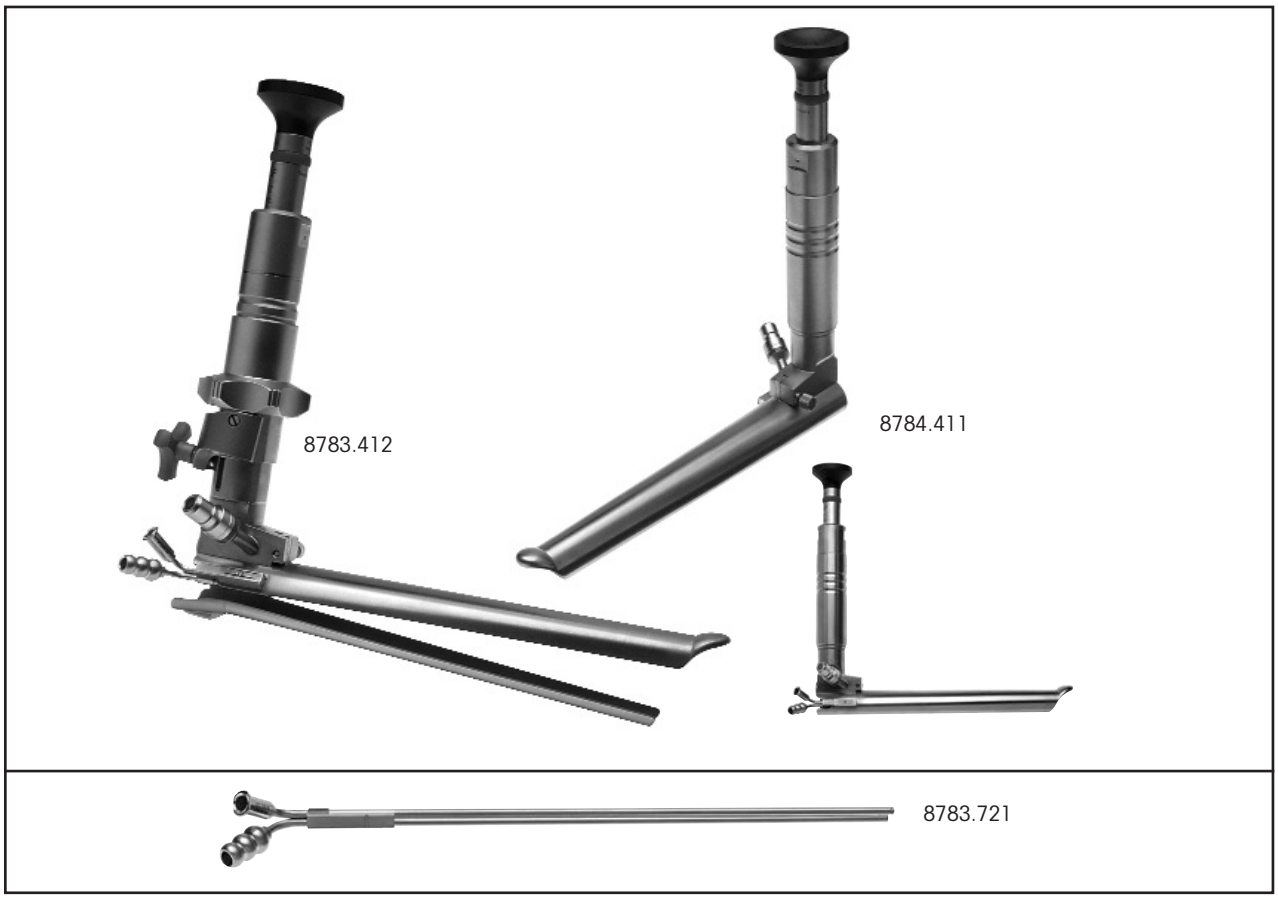

Video Mediastinoscope
with Dilating Blades 8783.412
Mediastinoscope with integrated high-performance optics. Blades are adjustable to open duckbill style. Blades also open to adjust height between parallel blades. Suction-irrigation tube 8783.721 included. 160mm WL.

Video Mediastinoscope
with Tubular Blade 8784.411
Mediastinoscope with integrated high-performance optics. Fixed tubular style blade. Suction-irrigation tube 8783.721 included. 160mm WL.

Light Cable
3.5mm fiber bundle, 3M WL.....8061.0356

Instrument Tray
metal, 23"L x 11"W x 5.3"H 8585.025M

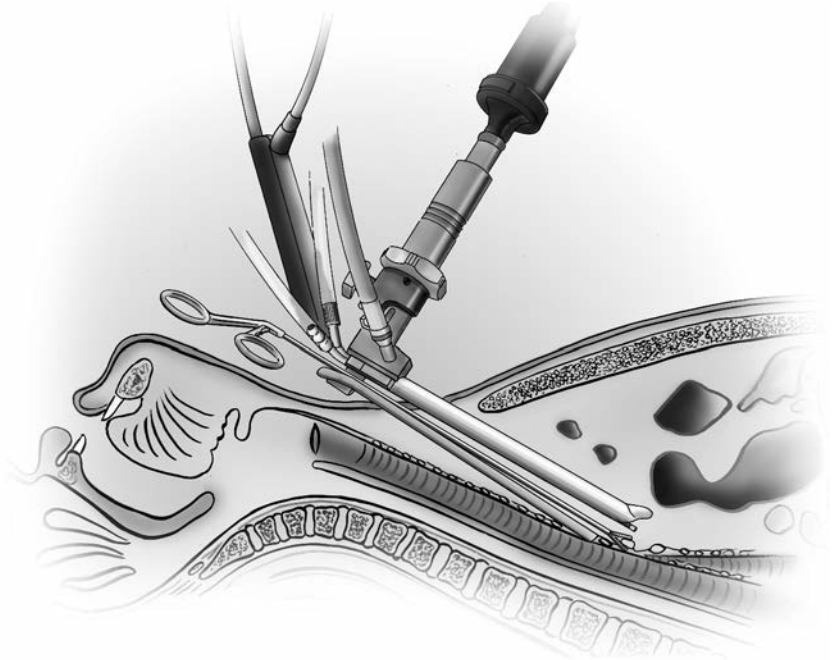

Mediastinoscope
"FREIBURG" Model

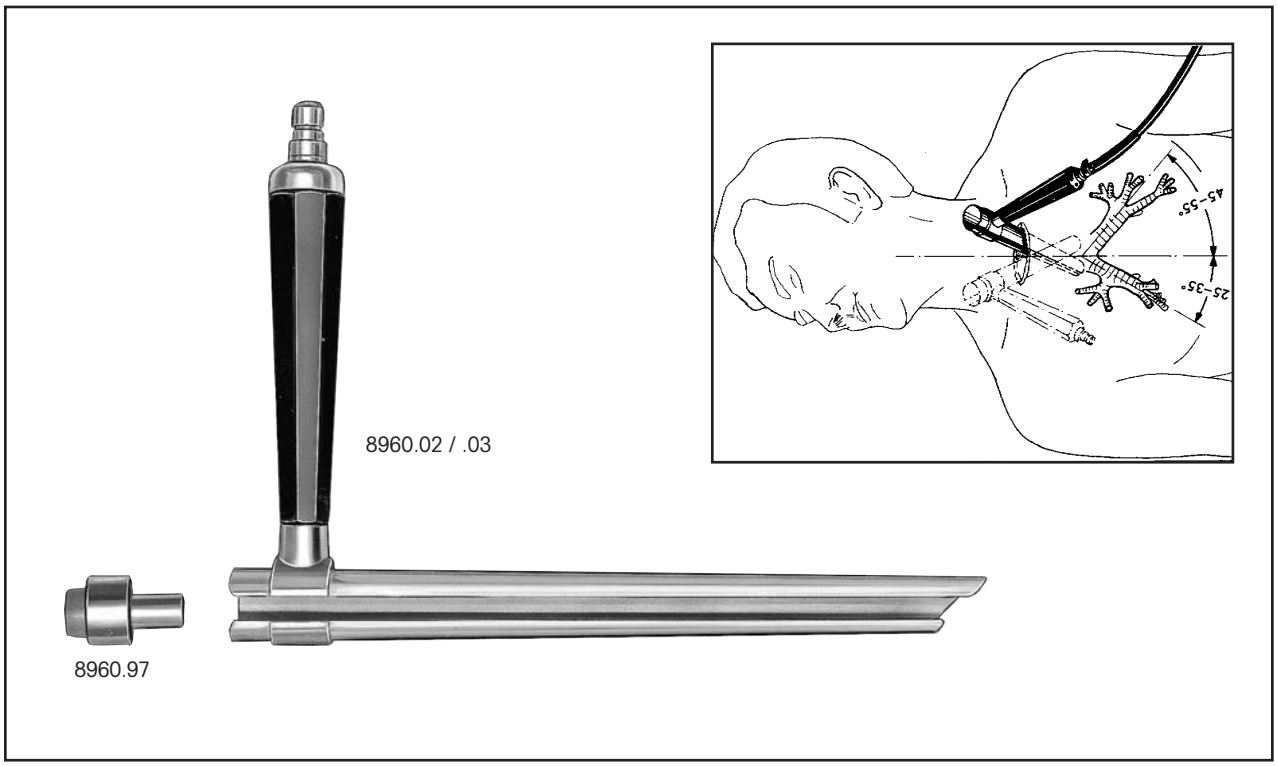

Mediastinoscope "FREIBURG" model
with integrated light guide,
140 mm working length 8960.02
170 mm working length 8960.03

Telescope guide
to use 7mm scope with 8960.02/03 .....8960.97

Tumor Grasping Forceps

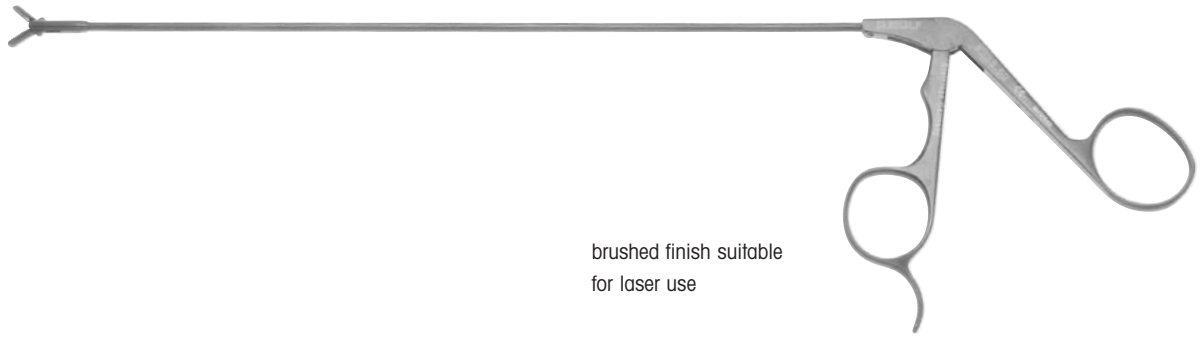

brushed finish suitable
for laser use

	Ø sheath head	WL	Type
Tumor grasper, small	3 mm	215 mm	8283.51
Tumor grasper, medium	4 mm	215 mm	8283.52
Tumor grasper, large	4 mm	215 mm	8283.53

monopolar

	Ø	WL	Type
Grasping microforceps, curved left	2.6 mm	215 mm	8254.601
Grasping microforceps, curved right	2.6 mm	215 mm	8254.602

HF connecting cable
for Valleylab, reusable 8106.033

Forceps

for mediastinoscopy

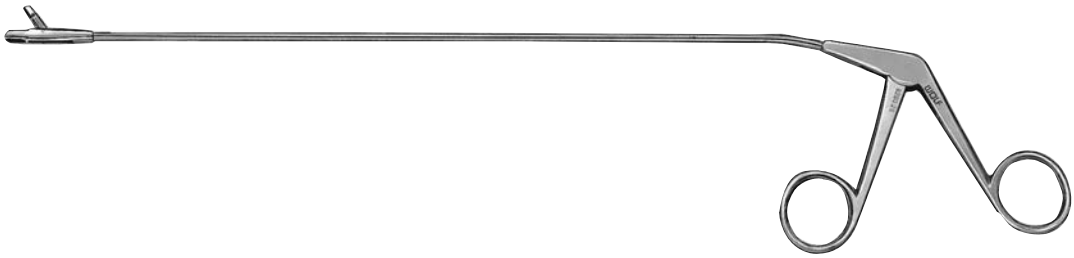

	Ø	WL	Types
Universal grasping and biopsy forceps	3 mm	260 mm	**8280.22**
Tumor forceps	3 mm	260 mm	**8280.26**

Sponge Forceps

for mediastinoscopy

	Ø	WL	Types
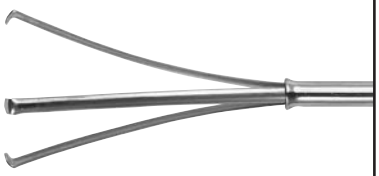 **Sponge forceps**	3 mm	300 mm	**8148.02**

8279.01

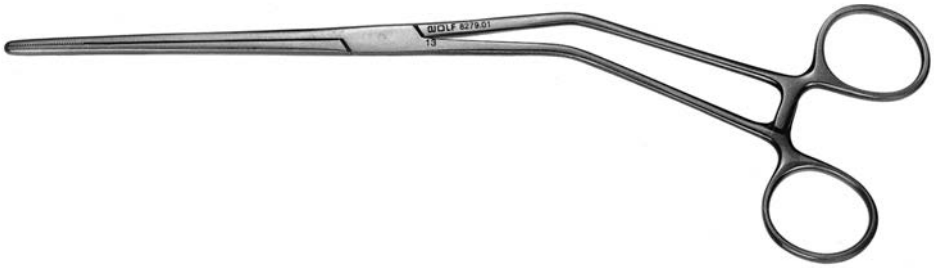

Dissecting and sponge forceps.....8279.01

Cannula

for mediastinoscopy

	Ø	WL	Types
Mediastinal cannula, inner diameter 0.8mm, 23 gauge needle	2 mm	260 mm	**8188.11**

HF Coagulating Aspirator

for mediastinoscopy

	Ø	WL	Types
HF coagulating aspirator	2.8 mm	210 mm	**8291.101**
HF coagulating aspirator	4.0 mm	210 mm	**8291.102**
Coagulation-suction tube, insulated, sharp	5.0 mm	250 mm	**8188.02**

HF connecting cable
for Valleylab, reusable 8106.033

Accessories / Parts

- Trays
- Cleaning Brushes
- Scope Protectors
- Scope Warmer
- Scope Holders
- Connecting Cables
- Light Cables
- Replacement Parts

Anodized Aluminum Trays

for Pre-Vac Autoclave, EtO and STERRAD Sterilization

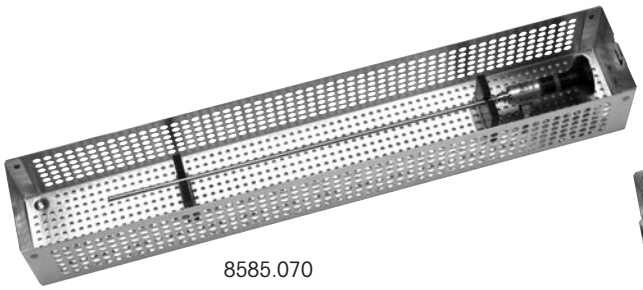

8585.070

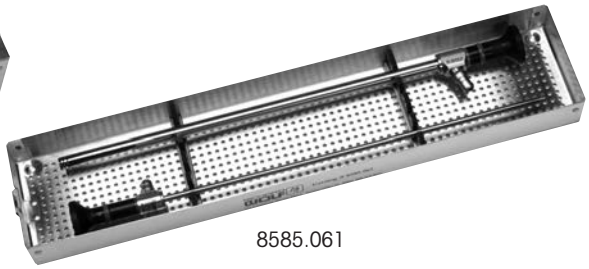

8585.061

		Inner Dimensions			Outer Dimensions			
	Suitable for:	Length (in)	Width (in)	Total Height (in)	Length (in)	Width (in)	Total Height (in)	Type
Single scope tray with brackets	5 mm – 10 mm rigid endoscopes	17.9	2.9	2.5	18.2	3.1	2.6	8585.070
Dual scope tray with universal brackets	5 mm – 10 mm rigid endoscopes	17.2	3.6	1.3	17.4	3.8	1.5	8585.061

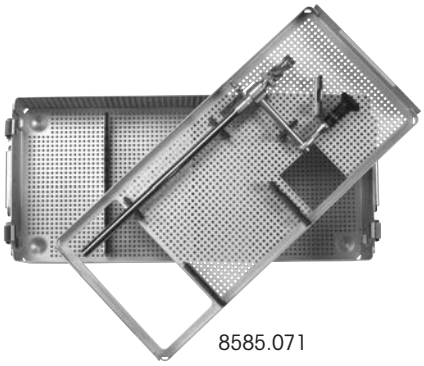

8585.071

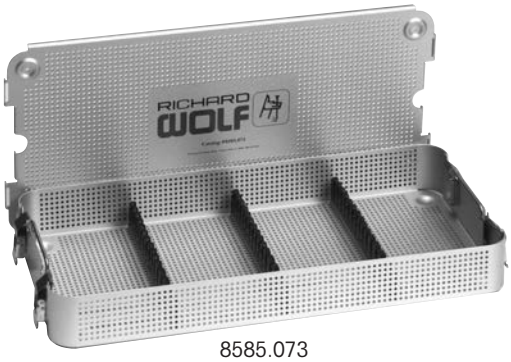

8585.073

		Inner Dimensions			Outer Dimensions			
	Suitable for:	Length (in)	Width (in)	Total Height (in)	Length (in)	Width (in)	Total Height (in)	Type
Universal Scope Tray, 2 tiers with brackets	Top tier hold operating laparoscope, bottom tier hold multiple endoscopes	18.7	8.5	3.5	19.9	8.9	3.9	8585.071
Universal Tray with 3 brackets	Endoscopes, forceps and accessories	20.6	9.7	2.4	21.9	10.2	2.8	8585.073

Anodized Aluminum Trays

for Pre-Vac Autoclave, EtO and STERRAD Sterilization

8585.011

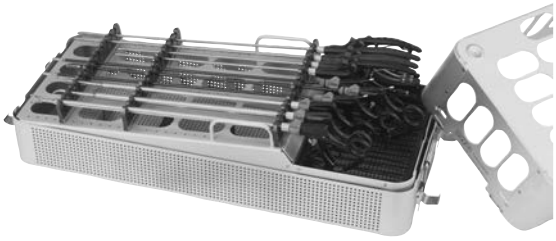

8585.021

		Inner Dimensions			Outer Dimensions			
	Suitable for:	Length (in)	Width (in)	Total Height (in)	Length (in)	Width (in)	Total Height (in)	Type
Lap Chole Tray with instrument rack, 8585.211	Holds 15 forceps and endoscopes securely	21.6	10.7	7.7	22.8	11.1	8	8585.011
Extra Long Lap Tray with instrument rack, 8585.221	Long instruments, bariatric set	25.6	10.7	7.7	26.8	11.1	8	8585.021

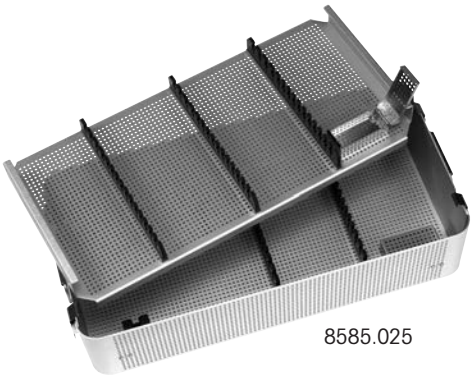

8585.025

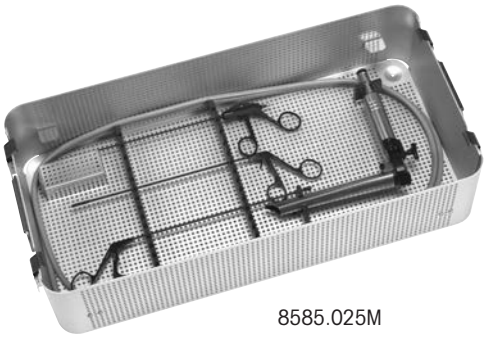

8585.025M

		Inner Dimensions			Outer Dimensions			
	Suitable for:	Length (in)	Width (in)	Total Height (in)	Length (in)	Width (in)	Total Height (in)	Type
Universal Tray, 2 tier with universal brackets	Endoscopes and instruments	21.6	10.7	3.4	22.8	11.1	5.3	8585.025
Video Mediastinoscope Tray 2 tier with brackets	Mediastinoscope and instrumentation	21.6	10.7	3.4	22.8	11.1	5.3	8585.025M

Anodized Aluminum Trays

for Pre-Vac Autoclave, EtO and STERRAD Sterilization

8585.027

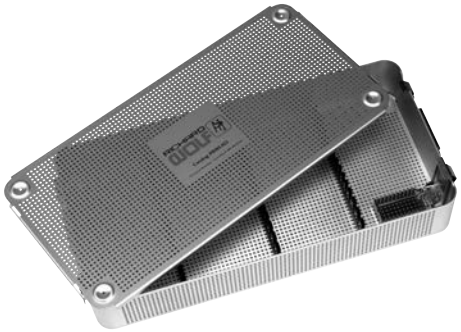

8585.023

		Inner Dimensions			Outer Dimensions			
	Suitable for:	Length (in)	Width (in)	Total Height (in)	Length (in)	Width (in)	Total Height (in)	Type
Universal Tray with 3 universal brackets	Longer instruments and endoscopes	25.6	10.7	3.4	26.8	11.1	3.8	8585.027
Universal Tray, with 3 brackets	Endoscopes and instruments	21.6	10.7	3.4	22.8	11.1	3.8	8585.023

8585.101

8585.091M

		Inner Dimensions			Outer Dimensions			
	Suitable for:	Length (in)	Width (in)	Total Height (in)	Length (in)	Width (in)	Total Height (in)	Type
Camera Head Tray	Camera Head and cord	8.7	8.5	2.5	9.9	8.9	2.9	8585.101
Fascial Closure Tray w/ pin matting	Fascial Closure System	10.6	4.8	1.3	10.9	5.1	1.5	8585.091M

Anodized Aluminum Trays

for Pre-Vac Autoclave, EtO and STERRAD Sterilization

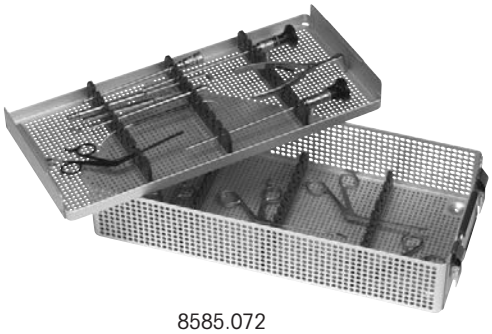

8585.072

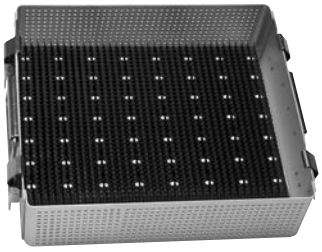

8585.026

		Inner Dimensions			Outer Dimensions			
	Suitable for:	Length (in)	Width (in)	Total Height (in)	Length (in)	Width (in)	Total Height (in)	Type
Universal Tray, 2 tiers with brackets	Endoscopes and instruments	18.7	8.5	3.5	19.9	8.9	3.9	8585.072
Martin Arm Tray	Martin arm and clamp	16.0	17.0	4.8	17.3	17.4	5.2	8585.026

Plastic Trays

for Pre-Vac Autoclave, EtO and STERRAD Sterilization

8570.012

8570.017

		Inner Dimensions			Outer Dimensions			
	Suitable for:	Length (in)	Width (in)	Total Height (in)	Length (in)	Width (in)	Total Height (in)	Type
Single scope tray with brackets	1.9 mm – 5 mm short rigid endoscopes	11.1	3	1.3	12	3.2	1.6	8570.012
Single scope tray with brackets	5 mm – 10 mm long rigid endoscopes	16.1	3	1.3	17	3.2	1.6	8570.017

8570.005

8570.010

		Inner Dimensions			Outer Dimensions			
	Suitable for:	Length (in)	Width (in)	Total Height (in)	Length (in)	Width (in)	Total Height (in)	Type
Dual scope tray	Holds two 4 mm rigid Cysto, Hystero scopes, or 5mm endoscopes	16.1	3	1.3	17	3.2	1.6	8570.005
Dual scope tray	Holds two 10 mm rigid endoscopes	16.1	3	1.3	17	3.2	1.6	8570.010

Plastic Trays

for Pre-Vac Autoclave, EtO and STERRAD Sterilization

8570.027

8570.040

		Inner Dimensions			Outer Dimensions			
	Suitable for:	Length (in)	Width (in)	Total Height (in)	Length (in)	Width (in)	Total Height (in)	Type
Hysteroscopy tray, laser etched	2.7 mm hysteroscopy set	19.5	8.7	1.7	19.8	9.0	1.8	8570.027
Hysteroscopy tray, laser etched	Compact hysteroscopy set	19.5	8.7	2.8	19.8	9.0	3.0	8570.040

8570.011

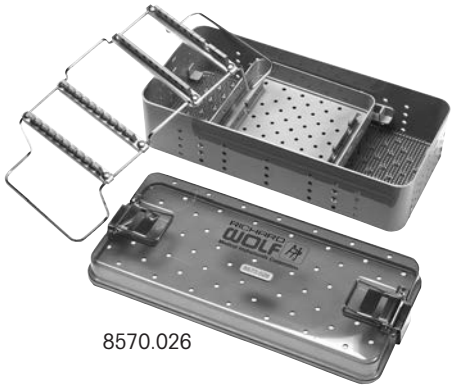

8570.026

		Inner Dimensions			Outer Dimensions			
	Suitable for:	Length (in)	Width (in)	Total Height (in)	Length (in)	Width (in)	Total Height (in)	Type
Instrument tray, 2 tiers	Holds forceps in top layer, endoscopes and other instrumentation in bottom layer	20	9.2	4.6	20.3	9.5	4.8	8570.011
Instrument tray	Holds 4 standard scopes, pin matting on the bottom layer for other instrumentation	20	9.2	4.6	20.3	9.5	4.8	8570.026

Plastic Trays

for Pre-Vac Autoclave, EtO and STERRAD Sterilization

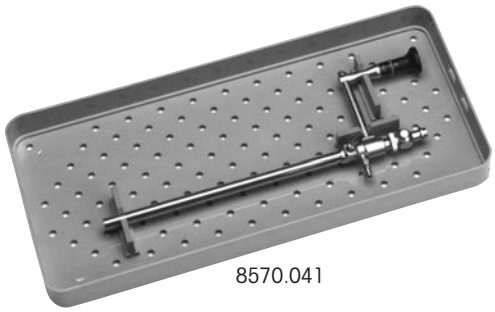

8570.041

8570.101

		Inner Dimensions			Outer Dimensions			
	Suitable for:	Length (in)	Width (in)	Total Height (in)	Length (in)	Width (in)	Total Height (in)	Type
Operating scope tray	Right angle operating laparoscope	19.5	8.7	1.7	19.8	9	1.8	8570.041
Universal tray	Camera head and cord	8.7	9.5	1.7	9	9.7	1.8	8570.101

Plastic Trays

EtO only

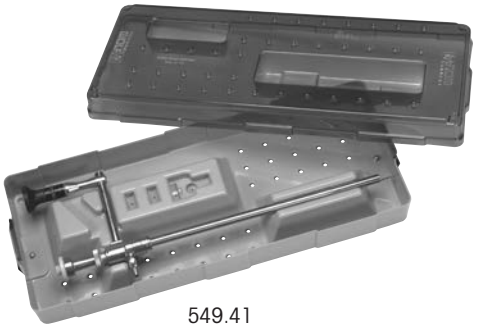

549.41

573.101

		Inner Dimensions			Outer Dimensions			
	Suitable for:	Length (in)	Width (in)	Total Height (in)	Length (in)	Width (in)	Total Height (in)	Type
Operating laparoscope tray	Right angle 10 mm laparoscope	17	16.5	1.75	17.25	7	2.75	549.41
Flexible endoscope tray	Flexible cystoscopes, ureteroscopes, hysteroscopes	–	–	–	21	13.25	3	573.101

Water Cleaning Gun

- Use with water or air
- Autoclavable
- Lightweight
- Heat insulated grip with easy trigger release
- New precision flow control mechanism
- Hooks up to standard faucet
- Wall mountable display rack for easy access to attachments.

Water Cleaning Gun
complete with attachments 6199.00

Cleaning Brushes

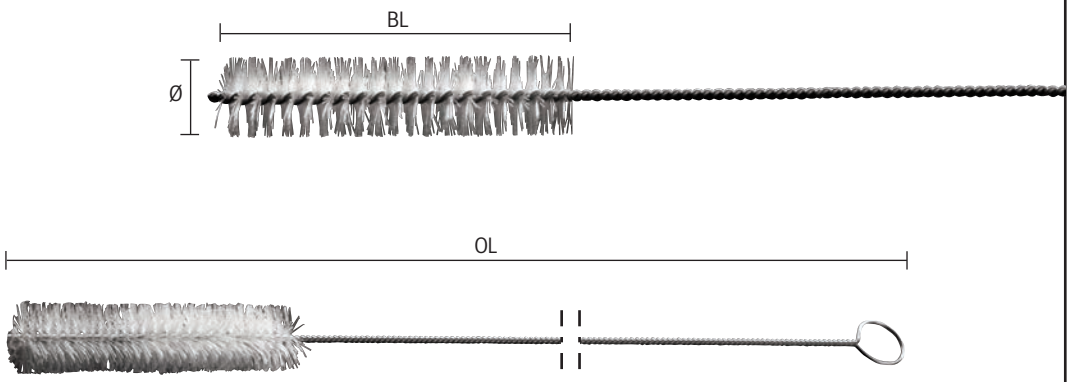

Ø mm	Brush length BL mm	Overall length OL mm	Example of areas of application	Types
11	100	360	Sheaths and trocar sleeves	6.01
5	50	375	Telescope guide tube for inserts and transporters	6.03
2	50	400	Electrode guide tubes for transporters	6.04
3	50	365		6.041
2	50	240		6.045
5	60	515	Operating laparoscope	6.05
5	50	240	Small-caliber sheaths (24 cm long)	6.06
1,8	55	610		6.061
13	80	340	Pediatric rectoscope tubes	6.07
1.3	25	610	Semi Rigid Ureteroscopes w/ 4 Fr. Channel	6.0640
0.8	12	610	Semi Rigid Ureteroscopes w/ 2.4 Fr. Channel	6.0624

Cleaning Brushes

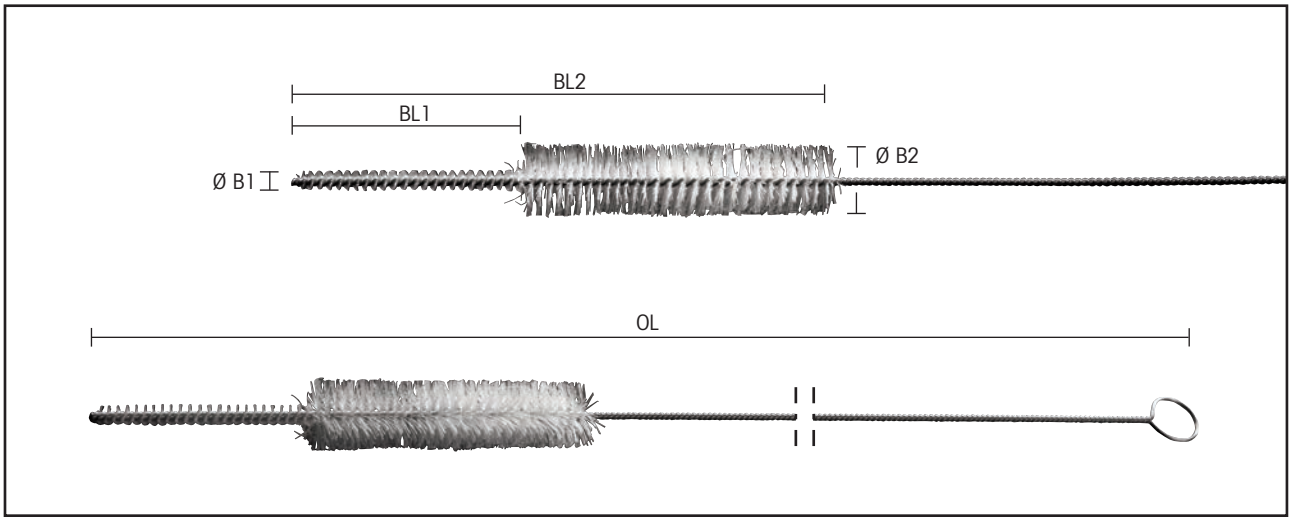

mm	mm	Brush length BL1 mm	Brush length BL2 mm	Overall length OL mm	Types
3	5	40	100	250	6.011
3	13	40	100	250	6.012

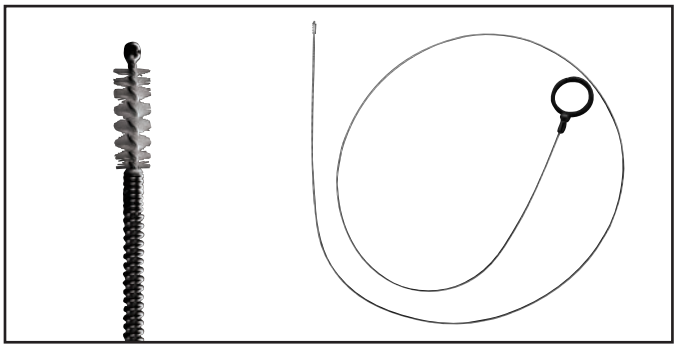

Ø mm	Brush length BL mm	Overall length OL mm	Types
5	10	2200	6.24
8	12	2200	6.40
12	20	2350	6.70
3	8	1000	7264.691
2.5	10	1000	7321.911

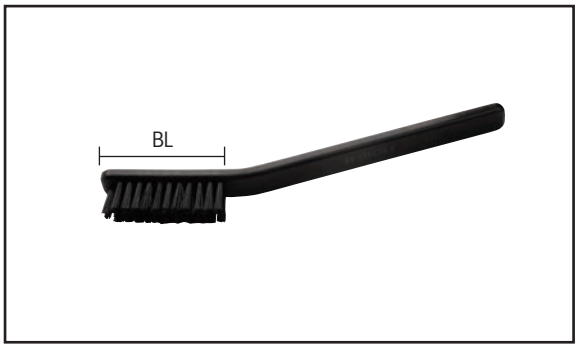

	Brush length BL mm	Type
Cleaning brush, autoclavable	42	86.90

Ultra Stop

Multi-Use Endoscope Anti-Fogging Agent

Product:	ULTRASTOP pro med. 3 ml, . sterile
Description:	Colorless liquid with a typical odor of Ethyl Alcohol
Density (20°C):	0,868
Refractive Index (20°C):	1,368
Identity of:	
Triethanolamine Salt of an alkyl Benzenesulfonic Acid:	Passes
Sodium Alkylsulfat:	Passes
Ethyl Alcohol:	Passes

*The contents of the active ingredients are not shown in figures due to the proprietary nature of the composition.

Ultra Stop

Multi-Use Endoscope Anti-Fogging Agent, 1 unit/box.....102.01

Modes of Application

Take Ultrastop from the vial using a sterile hypodermic needle. Apply one droplet of Ultrastop from the needle to the dry, clean and cold glass surface. Allow Ultrastop time to react and evaporate. Now polish the glass surface clean and crystal clear using a sterile, non-fraying gauze cloth — applying only gentle pressure.

Alternatively you should dampen a sterile swab with Ultrastop and spread over the endoscope optic.

Since the original Ultrastop "pro med" 30 ml vial was filled under sterile conditions, and product itself contains high-proof ethanol, it may be used down to the very last drop if handled properly (remove with sterile needle, disinfect rubber pad before inserting needle!).

With Ultrastop "pro med" it is no longer necessary to warm the endoscope before the operation.

Ultrastop is an Austrian product first developed several years ago by SIGMAPHARM as a special anti-fog agent for use with medical optics and endoscopes in surgery. Meanwhile Ultrastop in 25ml droppers and 30ml vials is in use in hospitals throughout the world and conforms to the most stringent medical requirements.

The active components of Ultrastop form an almost monomolecular, transparent film on glass surfaces. The film is absolutely clear and transparent.

Mr. Clear

Single Use Endoscope Anti-Fogging Agent

- Dispense packet contents onto sterile field.
- Remove bottle cap and invert to ensure sponge is moist.
- Apply to distal end of endoscope.
- Repeat as necessary during procedure.

Mr. Clear

Single Use Endoscope Anti-Fogging Agent 20/box 102.021

Scope Protectors

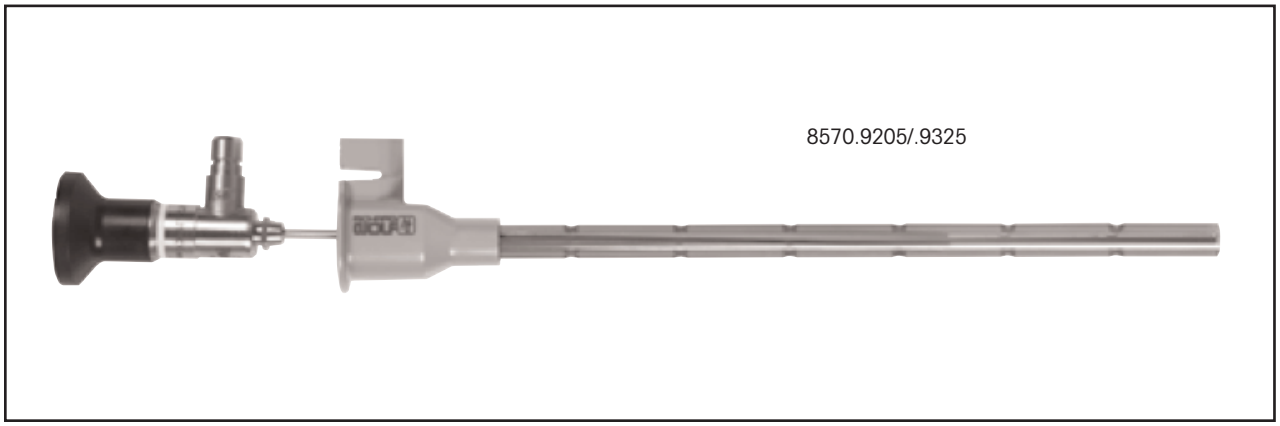

Protective Sleeves for Scopes
custom molded sleeves for storage
and sterilization of endoscopes, semi-reusable,
for scopes up to 5 mm outer diameter and
up to 20 cm WL, pack/5 .....8570.9205

for scopes up to 5 mm outer diameter and
up to 32 cm WL, pack/5 .....8570.9325

Laparoscope Warmer 2320

Electronic temperature control by multi cycle controller
Four endoscopes can be pre-heated to approx. 122° F simultaneously
Short warming cycle of approx. 10 minutes
Hinged feet allow unit to be tilted for easier access when inserting or removing endoscopes
For Laparoscopes up to 310 mm working length

Laparoscope warmer 2320
including 4 autoclavable tube inserts
with screw caps for four laparoscopes of up to
310 mm working length 2320.002

The Laparoscope warmer is used to warm laparoscopes to prevent them from fogging when introduced into the body (e.g. in laparoscopic surgery).

Spare tube insert for endoscopes of up to 310 mm
working length 8033.90

Anti-fogging solution, sterile 102.01

Scope / Instrument Holder

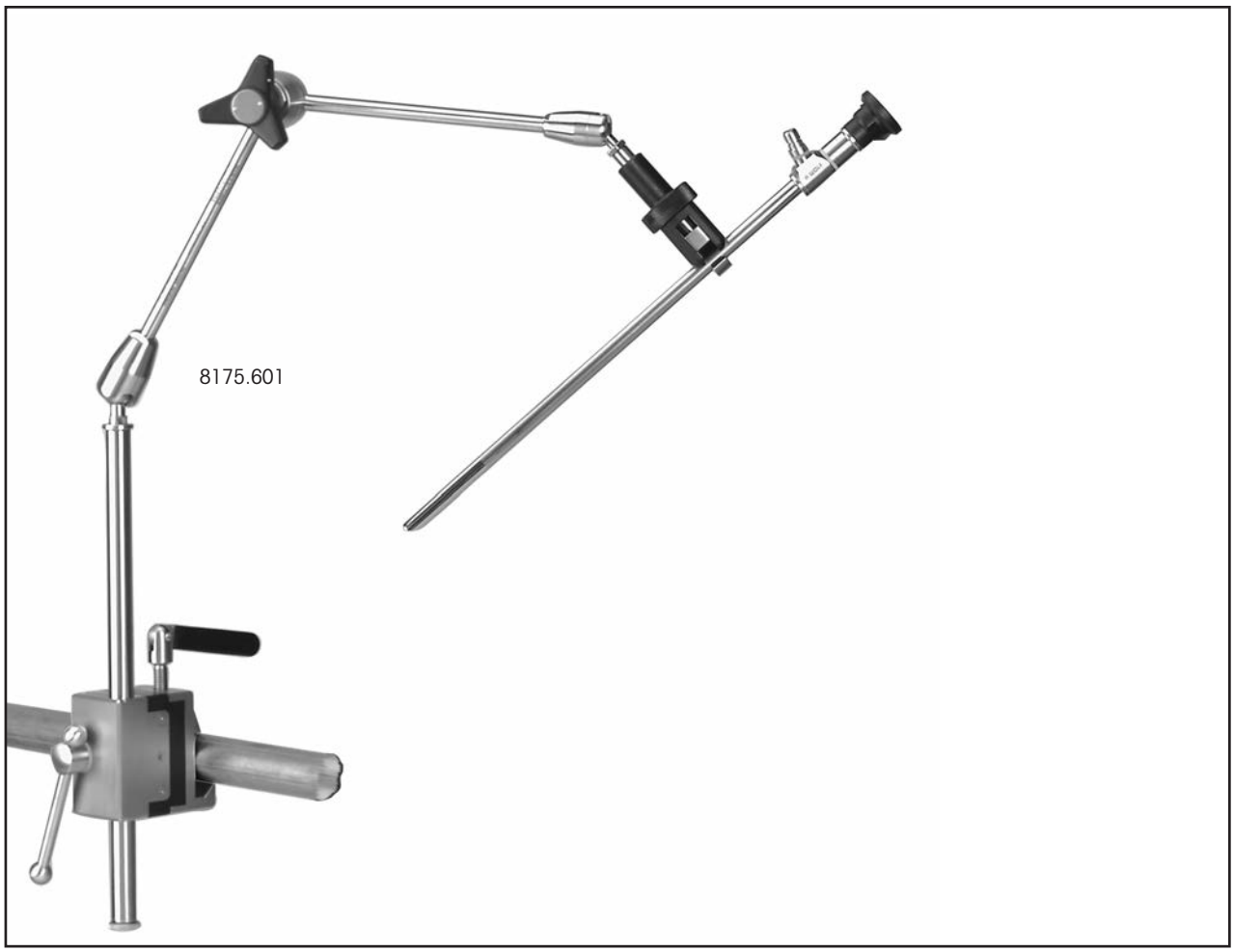

Articulating scope / instrument holder,*
stabilizes laparoscopes, trocar sleeves and liver
retractors to maintain their position 8175.601

*for use with instruments and scopes from 5 mm - 12 mm in diameter

ENDOmotion System

Mechanical Support Arm

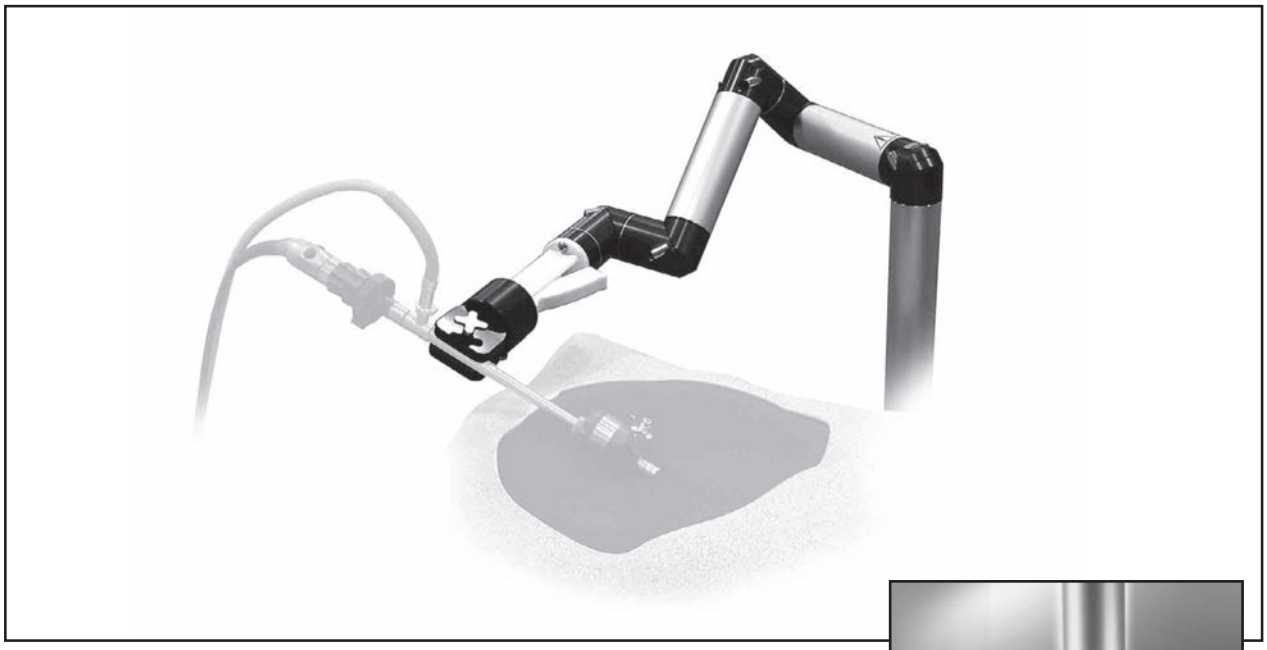

Support arm with mounting clamp on rail.

ENDOmotion System
Universal support arm for laparoscopy
consisting of:
ENDOmotion arm (37500.002), mechanical arm with six 360° rotatable articulated joints which can be released and moved by pressing the handle. Releasing the handle creates a locking of the joints:
Flying range: 640 mm, action distance: 604.5 mm, weight: 6 kg,
Autoclavable endoscope mounting (83750.001) for secure fixation of laparoscopic telescopes and auxiliary instruments,
clamp for fixation (37500.005) on
OR-table-standard fitting,
case (37500.010).....37500.001

Sterile drapes for support arm
7″ x 96″, individually packaged, box/50 .....5510.891

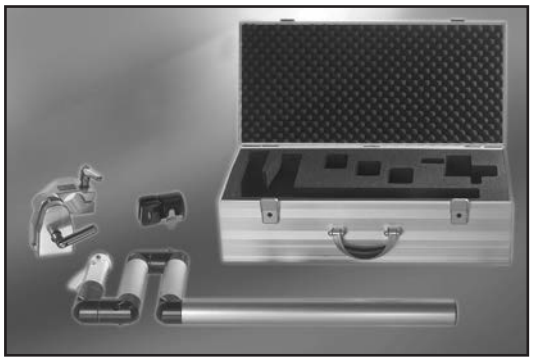

Storage case 375000.010.

HF Bipolar Connecting Cables

Instrument connecting	Unit connecting	Length	Part Number
WOLF Bipolar forceps	ERBE / ACC / ICC / T	3 m	**8108.032**
	2 pin Valleylab	3 m	**8108.033**
		5 m	**8108.053**
	Conmed and other devices with 4 mm connectors	3 m	**8108.034**
	WOLF / Martin / Berchtold / Aesculap	3 m	**8108.031**
		5 m	**8108.051**
	WOLF Disposable, box of 10	3 m	**8108.011**
Bipolar Tweezers connecting	2 pin Valleylab	3 m	**8108.133**
	WOLF / Martin / Berchtold / Aesculap	3 m	**8108.131**

HF Monopolar Connecting Cables

Instrument connecting	Unit connecting	Length	Part Number
WOLF - Resectoscopes 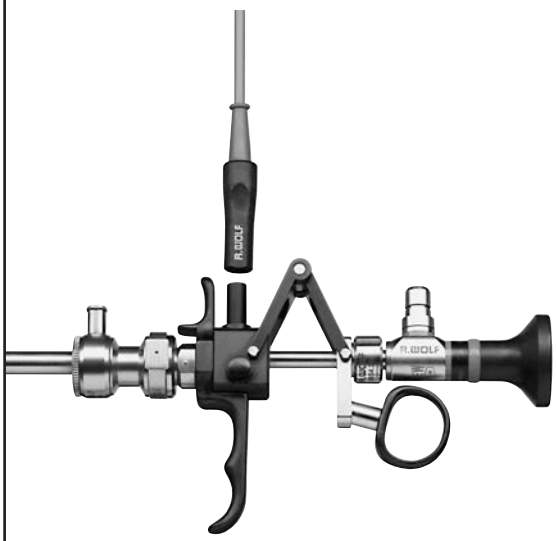	ERBE T-Series / Wolf	3 m	**815.132**
	Bovie / Valleylab / Erbe Int.	3 m	**815.033**
			415.0030*
		5 m	**815.053**
WOLF - Instrument	ERBE T-Series / Wolf	3 m	**8106.132**
			4106.1320*
	Bovie / Valleylab / Erbe Int.	3 m	**8106.033**
			4106.0330
		5 m	**8106.053**

***Disposable cables, individually packed sterile, box of 10.**

Adapter for HF Cable 8106 to 815 ..... 8106.815

Video

Adapters

For connecting Richard Wolf light cables to light sources and endoscopes of other manufacturers

	Light Source Adapters	Endoscope Adapters
Richard Wolf	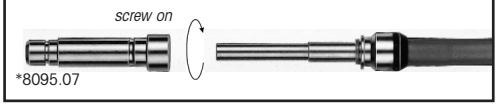	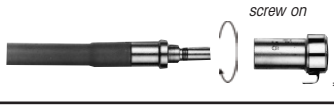
ACMI/Gyrus	8083.10	8081.00 *both needed* 8081.01
Storz	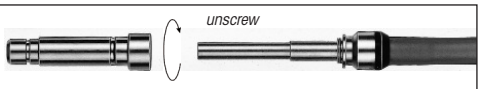 Richard Wolf cables fit without adapter	8091.00
Olympus	8096.811	8091.00
Stryker/Dyonics	8094.00	
Fuji	8096.85	
Machida	8097.11	

* For 8063.353 high temperature light cables use 8096.631

**For 1.6mm endoscopes use 15004.013

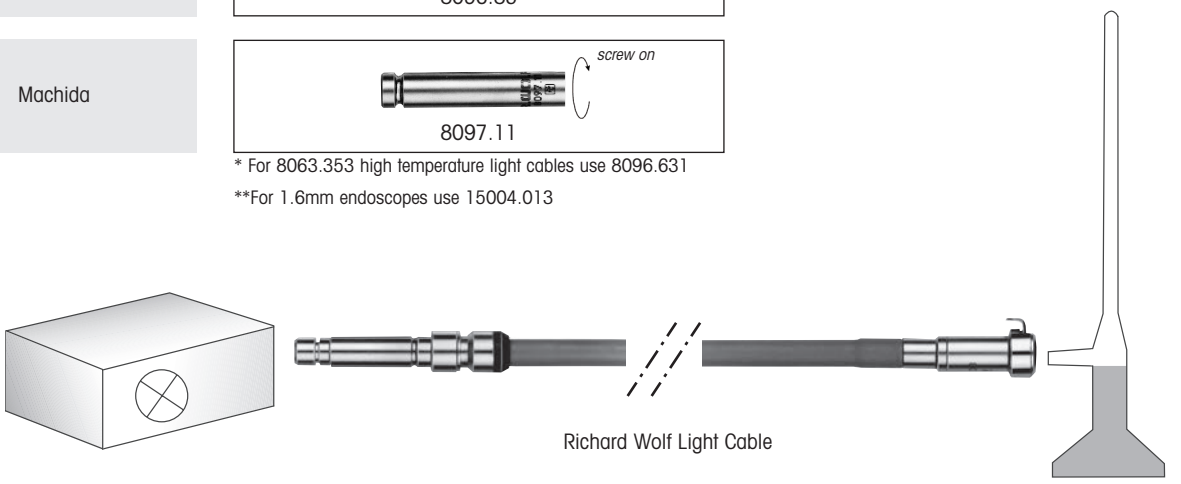

Adapters

For connecting Richard Wolf endoscopes to light cables of other manufacturers

Richard Wolf	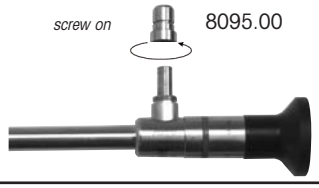
ACMI/Gyrus	*8087.00
Storz	8088.00
Olympus-Standard	8088.80
Olympus-WAO3...A	8088.81

*8087.00 fits: AFI, Aspen, Concept, Cuda, Dyonics, Eder, KLI, Linvatec, Lutex, Pilling, Stryker, V. Mueller, Wehmer, Weck, Zeiss

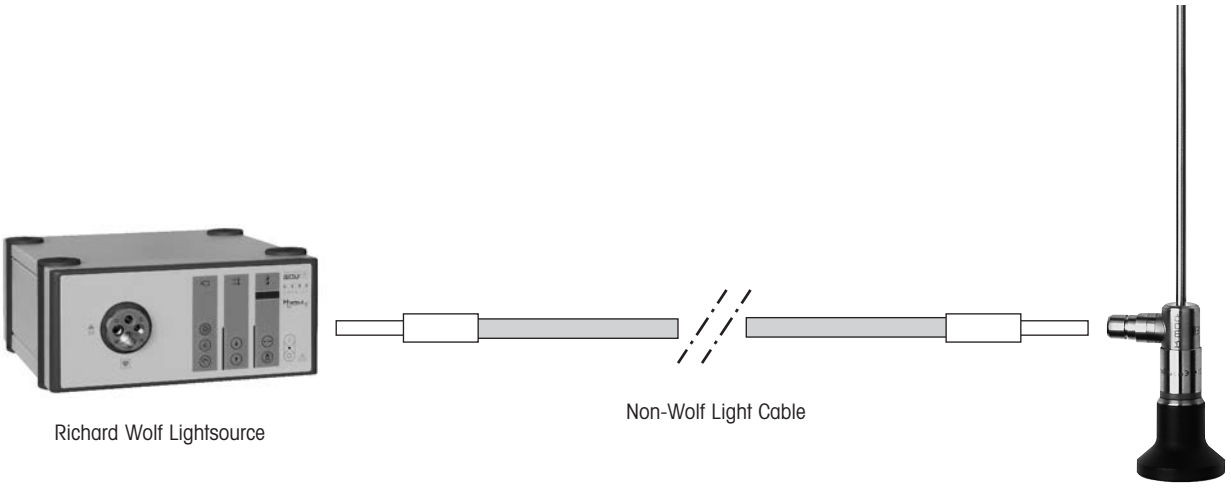

Video

Fiber Light Cables

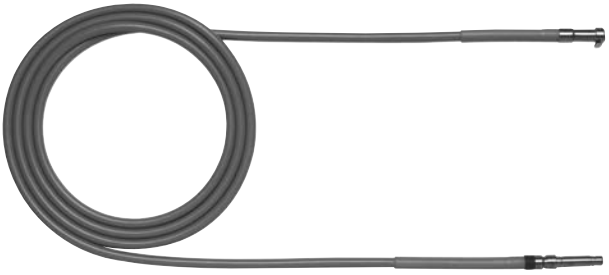

- **Straight Light Cables** offer versatility throughout all endoscopic fields
  1.6 mm x 1.8 M.....8061.16
  2.5 mm x 3 M 8061.0256
  3.5 mm x 3 M 8061.0356
  4.5 mm x 3 M 8061.0456

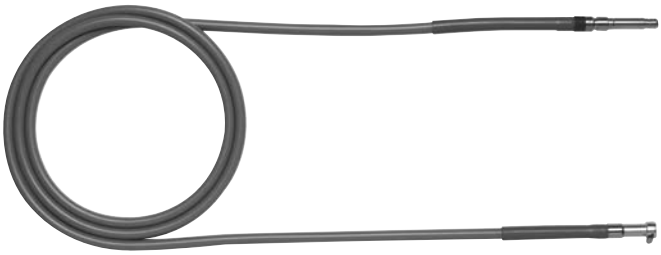

- **Translucent Light Cables**
  2.5 mm x 3 M, green 8069.256
  3.5 mm x 3 M, blue 8069.356
  4.5 mm x 3 M, purple 8069.456

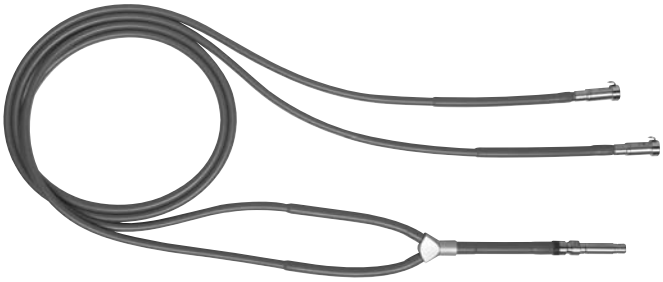

- **Dual Light Cables** allow two endoscopes to be used simultaneously with one light source
  3.5 mm x 2 M 8062.35

AUTOCLAVE
134° C / 273° F

Replacement Parts for Bipolar Instruments Classic Kleppinger Style

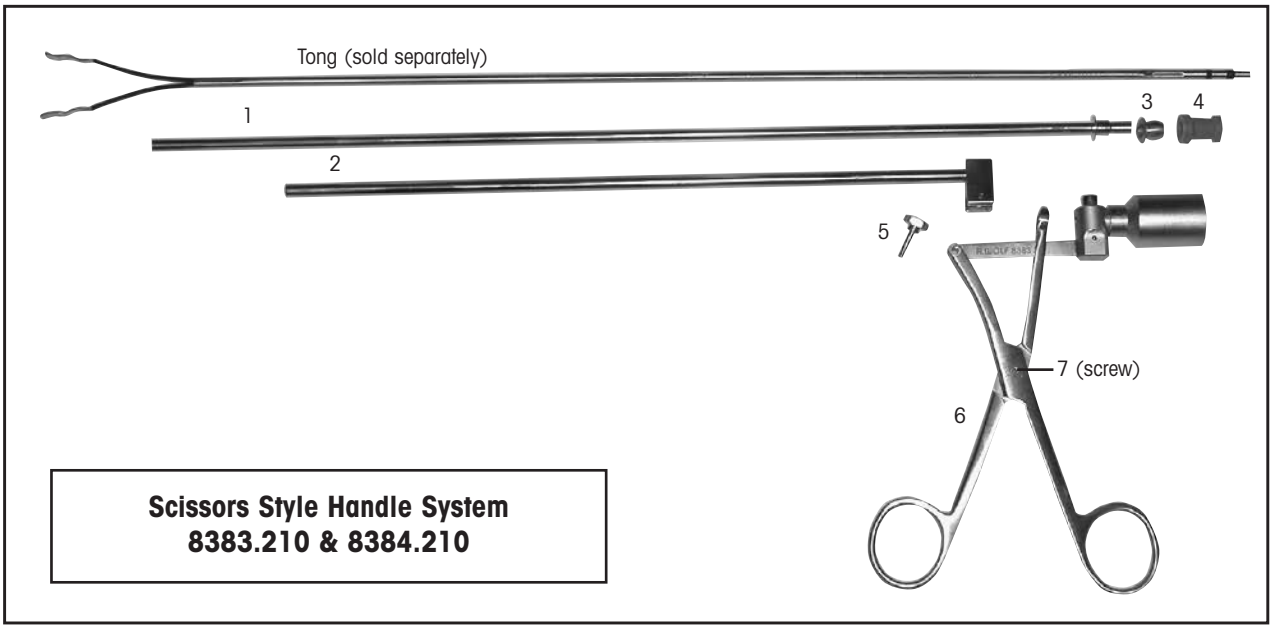

Parts	8383.210 (32cm WL)	8384.210 (45cm WL)
1) Guide Tubing	15181.002	15181.003
2) Outer Shaft	N900191	N900193
3) Sealing Cap Housing	15072.014	15072.014
4) Sealing Cap	88.04GR	88.04GR
5) Hex Head Screw	N110061	N110061
6) Handle Assembly	N900177	N900177
7) Screw	N110092	N110092

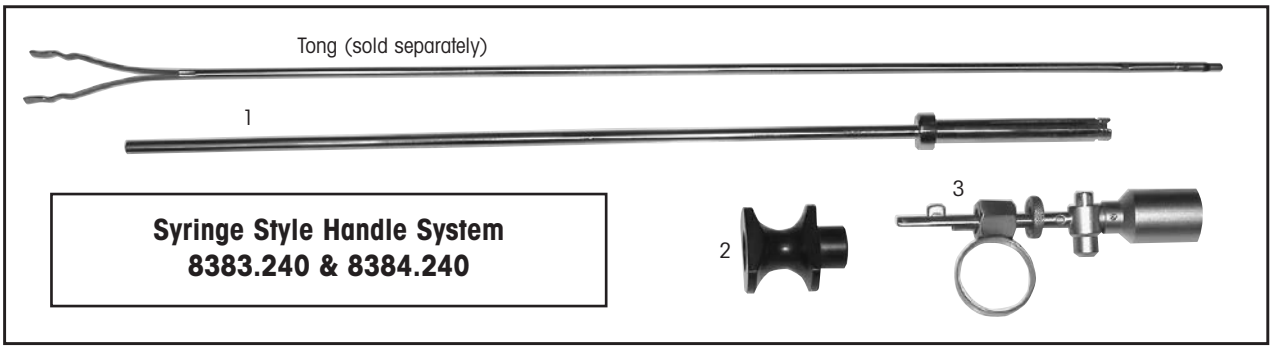

Parts	8383.240 (32cm WL)	8384.240 (45cm WL)
1) Guide Tubing	N900128	N900129
2) Finger Guide	N230049	N230049
3) Thumb-ring Assembly	N900132	N900132

Spare Parts for Trocar Sleeves

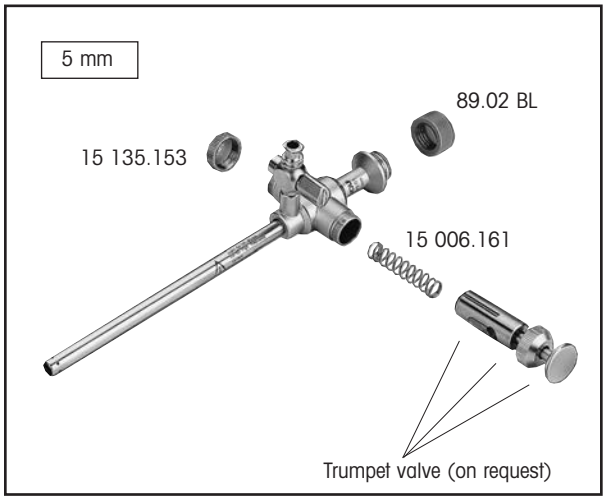

8940.01 / 8940.03

Base cover 15 135.153
Sealing caps,
pkg of 12, blue .....89.02 BL
Spring 15 006.161

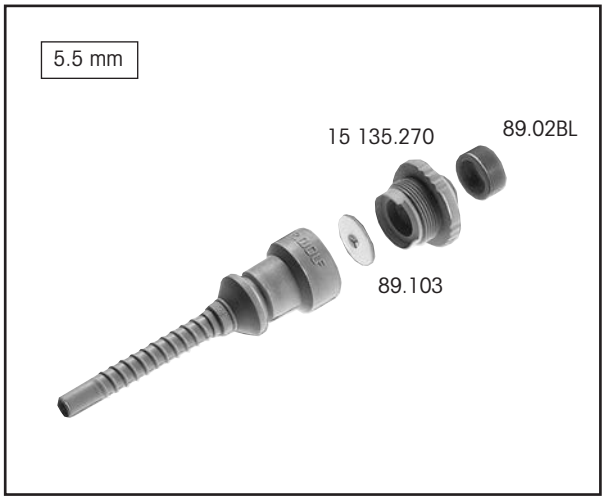

8920.001 / 8920.003

Cap housing,
complete 15 135.270
Membrane valves,
pkg of 10 .....89.103
Sealing caps,
pkg of 12, blue .....89.02 BL

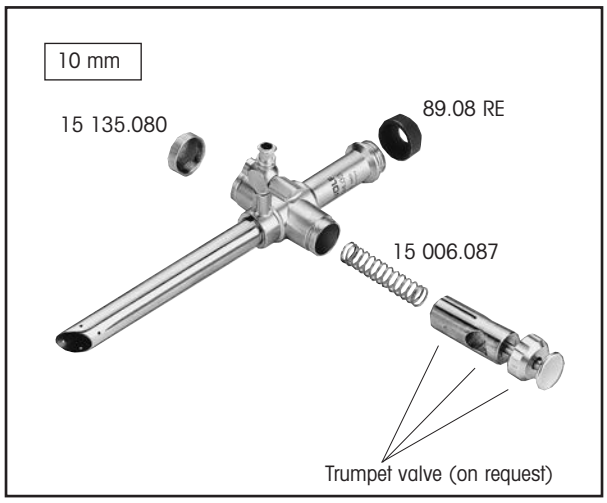

8934.01 / 8934.03 / 8934.071

Base cover 15 135.080
Sealing caps,
pkg of 12, red .....89.08 RE
Spring 15 006.087

Replacement Parts for Trocar Sleeves

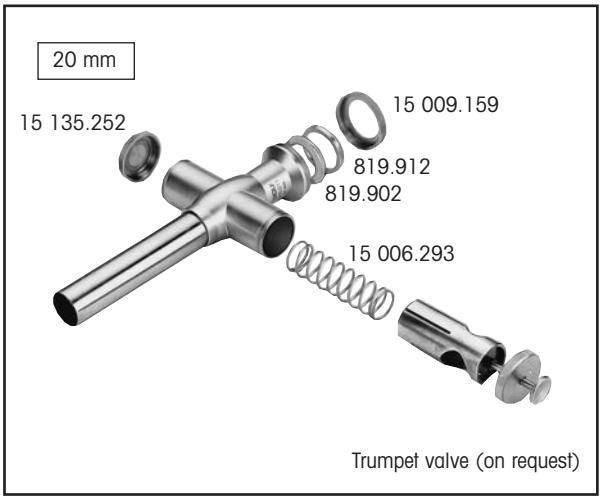

8945.011

Base cover 15 135.252
Union nut 15 009.159
Inner ring, metal 819.912
Washer 819.902
Spring 15 006.293

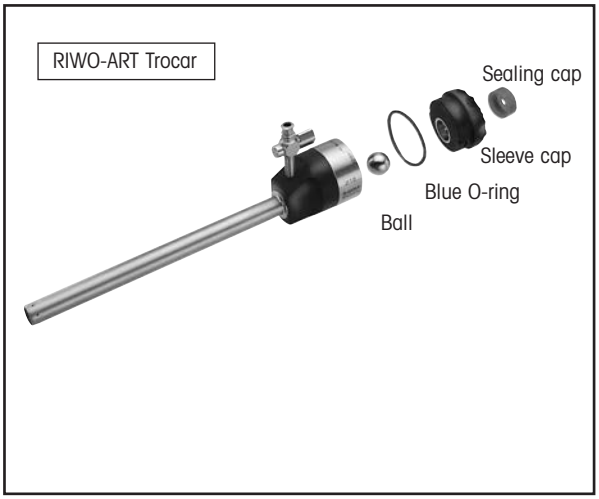

RIWO-ART Trocar

Replacement Sealing Caps
for 3.5 mm RIWO-ART trocar, 12/pkg. ....89.01 RE
for 5.5 mm RIWO-ART trocar, 12/pkg. ....89.02 BL
for 7 mm RIWO-ART trocar, 12/pkg. ..... 89.171 BR
for 10 mm RIWO-ART trocar, 12/pkg. ....89.08 RE
for 12.5 mm RIWO-ART trocar, 12/pkg. ....89.09 BL

O-Rings
for 3.5 mm and 5.5 mm RIWO-ART trocars 8921.951
for 7 mm, 10 mm and 12.5 mm RIWO-ART trocars 8923.951

Ball Valve
for 3.5 mm and 5.5 mm RIWO-ART trocars 8921.901
for 7 mm, 10 mm and 12.5 mm RIWO-ART trocars 8923.901

Sleeve Cap
for 3.5 mm 15 157.190
for 5.5 mm 15 157.189
for 7 mm 15 114.043
for 10 mm 15 114.045
for 12.5 mm 15 114.044

Miscellaneous Replacement Parts

Miscellaneous Replacement Parts
O-Ring for rotatable stopcock 15364.068
RW Mount Eyepiece 8885.901

Luer Connectors
Luer connector, male,
3 mm 886.00
4 mm 886.01
Luer connector, female,
3 mm 891.00
4 mm 891.011
Luer lock cap
3 mm Luer connector 887.00
4 mm Luer connector 887.01
Luer lock connecter, male,
3 mm 884.00
4 mm 884.01
Luer lock connector, two-way stopcock, male,
3 mm 883.00
4 mm 883.01
Luer lock connecter, two-way stopcock, male,
water inlet from left,
4 mm 883.12

Conical irrigation adapter for catheters:
(with wide tunnel for catheters to attach two-way stopcock or locking stopcock),
4 mm 883.01

Metal Port Fitting
Metal Instrument Port Fitting 15256.382
Mini Membrane Valve 10/pack 89.101

Flush Port Caps for forceps
plastic replacement caps, 10/pack 88.944
metal replacement cap, ea.....887.00

Replacement Parts for Verres Cannula
8302.08/.12/.15
Stopcock knob 15039.008
Stopcock valve cap 15040.012
Pin 15020.076
Spring (inside cap) 15006.176
Luer connector 886.00

Sealing Caps
Type S:
88.00RE: 12/pkg .....red .....no hole
88.005RE: 12/pkg .....red .....up to 1mm
88.01RE: 12/pkg .....red 1mm-2mm
18.01RE, long: 12/pkg .....red 1mm-2mm
88.02BL: 12/pkg .....blue 2mm-3mm
88.03BK: 12/pkg .....black 3mm-4mm
88.04GR: 12/pkg .....green 4mm-5mm
Type C:(for fittings greater than 5.5mm or less)
89.00BK: 12/pkg .....black.....up to 2mm
89.01RE: 12/pkg .....red 2mm-3mm
89.02BL: 12/pkg .....blue 3mm-4mm
89.03GY: 12/pkg .....grey 5mm-6mm
89.04BR: 12/pkg .....brown 6mm-7mm
89.05YE: 12/pkg .....yellow.....7mm-8mm
89.06GR: 12/pkg .....green 8mm-9mm
89.07BK: 12/pkg .....black 9mm-9.5mm
Type C:(for fittings greater than 5.5mm)
89.90RE (self sealing): 12/pkg .....red 3.4mm-4.5mm
89.20RE (15mm): 12/pkg .....red .....no hole
89.171BR: 12/pkg .....brown 6mm-7mm
89.08RE: 12/pkg .....red 9.5mm-10mm
89.09BL: 12/pkg .....blue 10mm-12mm
89.10RE: 12/pkg .....red 13mm-14mm
89.21RE (17mm): 12/pkg .....red .....no hole

Sealing Membrane Valve
replacement membrane valves, 10/pack 89.103

Sealing Cap Chart

TYPE S

Sealing Cap	Color	Insert Capacity
88.00RE	Red	No Hole
88.005RE	Red	Up to 1mm
88.01RE	Red	1mm to 2mm
18.01RE (long)	Red	1mm to 2mm
88.02BL	Blue	2mm to 3mm
88.03BK	Black	3mm to 4mm
88.04GR	Green	4mm to 5mm
84.012	White	3-6Fr.
84.022	Gray	6-9Fr.

TYPE C

For fittings 5.5mm or less

Sealing Cap	Color	Insert Capacity
89.00BK	Black	Up to 2mm
89.01RE	Red	2mm to 3mm
89.02BL	Blue	3mm to 4mm
89.03GY	Grey	5mm to 6mm
89.04BR	Brown	6mm to 7mm
89.05YE	Yellow	7mm to 8mm
89.06GR	Green	8mm to 9mm
89.07BK	Black	9mm to 9.5mm

TYPE C

For fittings greater than 5.5mm

Sealing Cap	Color	Insert Capacity
89.90RE (self sealing)	Red	3.4mm to 4.5mm
89.20RE (15mm)	Red	No Hole
89.171BR	Brown	6mm to 7mm
89.08RE	Red	9.5mm to 10mm
89.09BL	Blue	10mm to 12mm
89.10RE	Red	13mm to 14mm
89.21RE (17mm)	Red	No Hole

(End view illustrations are not shown at actual size.)

RICHARD WOLF

Alpha Index

Description	Product #	Page #
Alligator Grasper, 10mm OD, 310mm WL	8395.2362	47
Alligator Grasper, Insert, 10mm OD, 310mm WL	8395.236	47
Alligator Grasper, single pc, 10mm OD, 310mm WL	8385.13	51
Alligator Grasper, single pc, 5mm OD, 310mm WL	8383.08	43
Alligator Grasper, single pc, 5mm OD, 310mm WL	8393.4159	35
Allis Grasper, Insert, Modu-line, 5mm OD, 310mm WL	8393.484	27
Allis Grasper, Insert, Modu-line, 5mm OD, 430mm WL	8394.484	27
Allis Grasper, Modu-line, 5mm OD, 310mm WL	8393.4842	27
Allis Grasper, Modu-line, 5mm OD, 430mm WL	8394.4842	27
Anti-Fogging Solution, Mr. Clear	102.021	171
Anti-Fogging Solution, UltraStop	102.01	170
Anvil Grasper, 10mm OD, 370mm WL	8397.6552	52
Anvil Grasper, Insert, 10mm OD, 370mm WL	8397.655	52
Artery Forceps, Curved Left, 5mm OD, 270mm WL	8242.651	142
Artery Forceps, Curved Right, 5mm OD, 270mm WL	8242.652	142
Aspiration Tube, 3mm OD, 100mm WL	8150.19	144
Aspiration-Injection Cannula, 15 guage, 5mm OD, 345mm WL	8383.65	87
Aspiration-Injection Cannula, 15 guage, 5mm OD, 415mm WL	8384.65	87, 145
Aspiration-Injection Cannula, 22 guage, 5mm OD, 345mm WL	8383.60	87, 145
Aspiration-Injection Cannula, 22 guage, 5mm OD, 415mm WL	8384.60	87
Aspiration-Injection Cannula, 2mm OD, 240mm WL	8309.241	86
Aspiration-Injection Cannula, 3.5mm OD, 310mm WL	8379.732	86
Aspiration-Suction Tube, 3mm inner diameter, 5mm OD, 320mm WL	8383.77	83
Babcock Grasper Large Tip, Insert, Modu-line, 5mm OD, 240mm WL	8392.187	30
Babcock Grasper Large Tip, Insert, Modu-line, 5mm OD, 310mm WL	8393.187	30
Babcock Grasper Large Tip, Insert, Modu-line, 5mm OD, 430mm WL	8394.187	30
Babcock Grasper Large Tip, Modu-line, 5mm OD, 240mm WL	8392.1872	30
Babcock Grasper Large Tip, Modu-line, 5mm OD, 310mm WL	8393.1872	30
Babcock Grasper Large Tip, Modu-line, 5mm OD, 430mm WL	8394.1872	30
Babcock Grasper, 10mm OD, 310mm WL	8395.2142	47

Description	Product #	Page #
Babcock Grasper, 3.5mm OD, 240mm WL	8390.2554	24
Babcock Grasper, 3.5mm OD, 310mm WL	8391.2554	24
Babcock Grasper, Insert, 10mm OD, 310mm WL	8395.214	47
Babcock Grasper, Insert, 3.5mm OD, 240mm WL	8390.255	24
Babcock Grasper, Insert, 3.5mm OD, 310mm WL	8391.255	24
Babcock Grasper, Insert, Modu-line, 5mm OD, 240mm WL	8392.186	26
Babcock Grasper, Insert, Modu-line, 5mm OD, 310mm WL	8393.186	26
Babcock Grasper, Insert, Modu-line, 5mm OD, 430mm WL	8394.186	26
Babcock Grasper, Modu-line, 5mm OD, 240mm WL	8392.1862	26
Babcock Grasper, Modu-line, 5mm OD, 310mm WL	8393.1862	26
Babcock Grasper, Modu-line, 5mm OD, 430mm WL	8394.1862	26
Babcock Grasper, single pc, 10mm OD, 310mm WL	8395.2147	50
Babcock Grasper, single pc, 10mm OD, 310mm WL	8395.2247	50
Babcock Grasper, single pc, 5mm OD, 310mm WL	8393.3257	36
Bariatric laparoscope, 10mm OD, 30 degree, 430mm WL	8934.4424	15
Bariatric laparoscope, 10mm OD, 50 degree, 430mm WL	8934.4434	15
Biopsy Cutting Forceps, Insert, Modu-line, 5mm OD, 310mm WL	8393.092	33
Biopsy Cutting Forceps, Insert, Modu-line, 5mm OD, 430mm WL	8394.092	33
Biopsy Cutting Forceps, Modu-line, 5mm OD, 310mm WL	8393.0923	33
Biopsy Cutting Forceps, Modu-line, 5mm OD, 430mm WL	8394.0923	33
Biopsy Forceps, 5 Fr., 380mm WL	8746.601	11
Biopsy Forceps, Cutting Action, single pc, 5mm OD, 310mm WL	8383.124	41
Biopsy Forceps, Hook Punch, single pc, 5mm OD, 310mm WL	8383.131	41
Biopsy Forceps, Hook Punch, single pc, 5mm OD, 310mm WL	8393.0168	38
Biopsy Forceps, Hook Punch, single pc, 5mm OD, 430mm WL	8384.131	41
Biopsy Forceps, Punch, 2mm OD, 240mm WL	8756.011	23
Biopsy Forceps, Punch, 3.5mm OD, 310mm WL	8391.4053	24
Biopsy Forceps, Punch, Insert, 3.5mm OD, 310mm WL	8391.405	24
Biopsy Forceps, Punch, w/ sharp tip, 2mm OD, 240mm WL	8756.012	23

Alpha Index

Description	Product #	Page #
Biopsy Forceps, Spiked, Insert, Modu-line, 5mm OD, 310mm WL	8393.091	33
Biopsy Forceps, Spiked, Insert, Modu-line, 5mm OD, 430mm WL	8394.091	33
Biopsy Forceps, Spiked, Modu-line, 5mm OD, 310mm WL	8393.0913	33
Biopsy Forceps, Spiked, Modu-line, 5mm OD, 430mm WL	8394.0913	33
Biopsy Forceps, Spiked, single pc, 5mm OD, 310mm WL	8383.101	41
Biopsy Forceps, Spiked, single pc, 5mm OD, 310mm WL	8383.471	43
Biopsy Forceps, Spiked, single pc, 5mm OD, 310mm WL	8393.4048	38
Biopsy Forceps, Spoon, 3.5mm OD, 310mm WL	8391.4063	24
Biopsy Forceps, Spoon, Insert, 3.5mm OD, 310mm WL	8391.406	24
Bipolar Forcep, Open Spring Handle, Kleppinger tong, 5mm OD, 320mm	8383.233	68
Bipolar Forcep, Open Spring Handle, Kleppinger tong, 5mm OD, 450mm	8384.233	68
Bipolar Forcep, Open Spring Handle, Micro tong, 5mm OD, 320mm WL	8383.235	68
Bipolar Forcep, Open Spring Handle, Micro tong, 5mm OD, 450mm WL	8384.235	68
Bipolar Forcep, Open Spring Handle, Reich paddle tong, 5mm OD, 320mm	8383.236	68
Bipolar Forcep, Open Spring Handle, Reich paddle tong, 5mm OD, 450mm	8384.236	68
Bipolar Forcep, Open Spring Handle, Teflon tooth tong, 5mm OD, 320mm	8383.232	68
Bipolar Forcep, Open Spring Handle, Teflon tooth tong, 5mm OD, 450mm	8384.232	68
Bipolar Forcep, Open Spring Handle, T-grasper tong, 5mm OD, 320mm WL	8383.23	68
Bipolar Forcep, Open Spring Handle, T-grasper tong, 5mm OD, 450mm WL	8384.23	68
Bipolar Forcep, Open Spring Handle, Tweezer tong, 5mm OD, 320mm WL	8383.234	68
Bipolar Forcep, Open Spring Handle, Tweezer tong, 5mm OD, 450mm WL	8384.234	68
Bipolar Forcep, Scissor Handle, Kleppinger tong, 5mm OD, 320mm	8383.2103	65
Bipolar Forcep, Scissor Handle, Kleppinger tong, 5mm OD, 450mm	8384.2103	65
Bipolar Forcep, Scissor Handle, Micro tong, 5mm OD, 320mm WL	8383.2106	65
Bipolar Forcep, Scissor Handle, Micro tong, 5mm OD, 450mm WL	8384.2106	65
Bipolar Forcep, Scissor Handle, Reich paddle tong, 5mm OD, 320mm WL	8383.2105	65
Bipolar Forcep, Scissor Handle, Reich paddle tong, 5mm OD, 450mm WL	8384.2105	65
Bipolar Forcep, Scissor Handle, Teflon tooth tong, 5mm OD, 320mm WL	8383.2102	65
Bipolar Forcep, Scissor Handle, Teflon tooth tong, 5mm OD, 450mm WL	8384.2102	65

Description	Product #	Page #
Bipolar Forcep, Scissor Handle, T-grasper tong, 5mm OD, 320mm WL	8383.2101	65
Bipolar Forcep, Scissor Handle, T-grasper tong, 5mm OD, 450mm WL	8384.2101	65
Bipolar Forcep, Scissor Handle, Tweezer tong, 5mm OD, 320mm WL	8383.2104	65
Bipolar Forcep, Scissor Handle, Tweezer tong, 5mm OD, 450mm WL	8384.2104	65
Bipolar Forcep, Sliding Handle, Kleppinger tong, 5mm OD, 150mm	8388.771	NA
Bipolar Forcep, Sliding Handle, Kleppinger tong, 5mm OD, 320mm	8393.771	66
Bipolar Forcep, Sliding Handle, Kleppinger tong, 5mm OD, 450mm	8394.771	66
Bipolar Forcep, Sliding Handle, Micro tong, 5mm OD, 320mm WL	8393.813	66
Bipolar Forcep, Sliding Handle, Micro tong, 5mm OD, 450mm WL	8394.813	66
Bipolar Forcep, Sliding Handle, Reich paddle tong, 5mm OD, 320mm WL	8393.823	66
Bipolar Forcep, Sliding Handle, Reich paddle tong, 5mm OD, 450mm WL	8394.823	66
Bipolar Forcep, Sliding Handle, Teflon tooth tong, 5mm OD, 320mm WL	8393.762	66
Bipolar Forcep, Sliding Handle, Teflon tooth tong, 5mm OD, 450mm WL	8394.762	66
Bipolar Forcep, Sliding Handle, T-grasper tong, 5mm OD, 320mm WL	8393.761	66
Bipolar Forcep, Sliding Handle, T-grasper tong, 5mm OD, 450mm WL	8394.761	66
Bipolar Forcep, Sliding Handle, Tweezer tong, 5mm OD, 320mm WL	8393.801	66
Bipolar Forcep, Sliding Handle, Tweezer tong, 5mm OD, 450mm WL	8394.801	66
Bipolar Forcep, Spring Handle, Kleppinger tong, 5mm OD, 150mm	8388.741	NA
Bipolar Forcep, Spring Handle, Kleppinger tong, 5mm OD, 320mm	8393.741	67
Bipolar Forcep, Spring Handle, Kleppinger tong, 5mm OD, 450mm	8394.741	67
Bipolar Forcep, Spring Handle, Micro tong, 5mm OD, 320mm WL	8393.793	67, 140
Bipolar Forcep, Spring Handle, Micro tong, 5mm OD, 450mm WL	8394.793	67
Bipolar Forcep, Spring Handle, paddle tong, 3.5mm OD, 340mm WL	8391.742	63
Bipolar Forcep, Spring Handle, Reich paddle tong, 5mm OD, 320mm WL	8393.803	67
Bipolar Forcep, Spring Handle, Reich paddle tong, 5mm OD, 450mm WL	8394.803	67
Bipolar Forcep, Spring Handle, Teflon tooth tong, 5mm OD, 320mm WL	8393.732	67
Bipolar Forcep, Spring Handle, Teflon tooth tong, 5mm OD, 450mm WL	8394.732	67
Bipolar Forcep, Spring Handle, T-grasper tong, 5mm OD, 320mm WL	8393.731	67
Bipolar Forcep, Spring Handle, T-grasper tong, 5mm OD, 450mm WL	8394.731	67

Alpha Index

Description	Product #	Page #
Bipolar Forcep, Spring Handle, Tweezer tong, 5mm OD, 320mm WL	8393.781	67
Bipolar Forcep, Spring Handle, Tweezer tong, 5mm OD, 450mm WL	8394.781	67
Bipolar Forcep, Syringe Handle, Kleppinger tong, 5mm OD, 150mm	8388.241	NA
Bipolar Forcep, Syringe Handle, Kleppinger tong, 5mm OD, 320mm	8383.2403	64
Bipolar Forcep, Syringe Handle, Kleppinger tong, 5mm OD, 450mm	8384.2403	64
Bipolar Forcep, Syringe Handle, Micro tong, 5mm OD, 320mm WL	8383.2406	64
Bipolar Forcep, Syringe Handle, Micro tong, 5mm OD, 450mm WL	8384.2406	64
Bipolar Forcep, Syringe Handle, Reich paddle tong, 5mm OD, 320mm WL	8383.2405	64
Bipolar Forcep, Syringe Handle, Reich paddle tong, 5mm OD, 450mm WL	8384.2405	64
Bipolar Forcep, Syringe Handle, Teflon tooth tong, 5mm OD, 320mm WL	8383.2402	64
Bipolar Forcep, Syringe Handle, Teflon tooth tong, 5mm OD, 450mm WL	8384.2402	64
Bipolar Forcep, Syringe Handle, T-grasper tong, 5mm OD, 320mm WL	8383.2401	64
Bipolar Forcep, Syringe Handle, T-grasper tong, 5mm OD, 450mm WL	8384.2401	64
Bipolar Forcep, Syringe Handle, Tweezer tong, 5mm OD, 320mm WL	8383.2404	64
Bipolar Forcep, Syringe Handle, Tweezer tong, 5mm OD, 450mm WL	8384.2404	64
Bipolar Generator	2352.011	71
Bipolar Tong, Kleppinger, 5mm OD, 150mm WL	8388.714	NA
Bipolar Tong, Kleppinger, 5mm OD, 320mm WL	8393.714	64
Bipolar Tong, Kleppinger, 5mm OD, 450mm WL	8394.714	64
Bipolar Tong, Micro, 5mm OD, 320mm WL	8393.726	64
Bipolar Tong, Micro, 5mm OD, 450mm WL	8394.726	64
Bipolar Tong, Paddle, 3.5mm OD, 340mm WL	8391.715	63
Bipolar Tong, Reich paddle, 5mm OD, 320mm WL	8393.725	64
Bipolar Tong, Reich paddle, 5mm OD, 450mm WL	8394.725	64
Bipolar Tong, Teflon Tooth, 5mm OD, 320mm WL	8393.705	64
Bipolar Tong, Teflon Tooth, 5mm OD, 450mm WL	8394.705	64
Bipolar Tong, T-Grasper, 5mm OD, 320mm WL	8393.704	64
Bipolar Tong, T-Grasper, 5mm OD, 450mm WL	8394.704	64
Bipolar Tong, Tweezer, 5mm OD, 320mm WL	8393.724	64

Description	Product #	Page #
Bipolar Tong, Tweezer, 5mm OD, 450mm WL	8394.724	64
Blunt Grasper, Insert, Modu-line, 5mm OD, 310mm WL	8393.195	26
Blunt Grasper, Insert, Modu-line, 5mm OD, 430mm WL	8394.195	26
Blunt Grasper, Modu-line, 5mm OD, 310mm WL	8393.1953	26
Blunt Grasper, Modu-line, 5mm OD, 430mm WL	8394.1953	26
Bullet Nose Grasper, single pc, 5mm OD, 310mm WL	8393.2349	36
Cable, Adapter for HF cable 8106 to 815	8106.815	177
Cable, Bipolar, for forceps, Conmed style, 3m	8108.034	176
Cable, Bipolar, for forceps, Erbe style, 3m	8108.032	176
Cable, Bipolar, for forceps, Valleylab style, 3m	8108.033	176
Cable, Bipolar, for forceps, Valleylab style, 5m	8108.053	176
Cable, Bipolar, for forceps, Wolf disposable, box/10	8108.011	176
Cable, Bipolar, for forceps, Wolf style, 3m	8108.031	176
Cable, Bipolar, for forceps, Wolf style, 5m	8108.051	176
Cable, Bipolar, for tweezer, Valleylab style, 3m	8108.133	176
Cable, Bipolar, for tweezer, Wolf style, 3m	8108.131	176
Cable, Monopolar, for forceps, Valleylab disposable, box/10	4106.0330	177
Cable, Monopolar, for forceps, Valleylab style, 3m	8106.033	177
Cable, Monopolar, for forceps, Valleylab style, 5m	8106.053	177
Cable, Monopolar, for forceps, Wolf disposable, box/10	4106.1320	177
Cable, Monopolar, for forceps, Wolf style, 3m	8106.132	177
Cable, Monopolar, for resectoscope, Valleylab disposable, box/10	415.0030	177
Cable, Monopolar, for resectoscope, Valleylab style, 3m	815.033	177
Cable, Monopolar, for resectoscope, Valleylab style, 5m	815.053	177
Cable, Monopolar, for resectoscope, Wolf style, 3m	815.132	177
Canister rings, box of 12	2215.973	81
Canisters, suction, Bemis, box of 36	2215.972	81
Cannula, Liver Biopsy, 2mm OD, 240mm WL	8309.261	86
Cannula, Puncture, w/ suction control, 5mm OD, 315mm WL	8383.49	88
Choledochoscope, flexible, 2.5mm OD, 450mm WL	7325.152	19

Alpha Index

Description	Product #	Page #
Clamps for mounting rail, set/2	31110.902	81
Claw Grasper, 2/3 Teeth, Insert, Modu-line, 5mm OD, 310mm WL	8393.488	27
Claw Grasper, 2/3 Teeth, Modu-line, 5mm OD, 310mm WL	8393.4882	27
Claw Grasper, Insert, Modu-line, 5mm OD, 310mm WL	8393.494	30
Claw Grasper, Modu-line, 5mm OD, 310mm WL	8393.4942	30
Cleaning Brush, 0.8mm OD, 12mm BL, 610mm OL	6.0624	168
Cleaning Brush, 1.3mm OD, 25mm BL, 610mm OL	6.0640	168
Cleaning Brush, 1.8mm OD, 55mm BL, 610mm OL	6.061	168
Cleaning Brush, 11mm OD, 100mm BL, 360mm OL	6.01	168
Cleaning Brush, 12mm OD, 20mm BL, 2350mm OL	6.70	169
Cleaning Brush, 13mm OD, 80mm BL, 340mm OL	6.07	168
Cleaning Brush, 2.5mm OD, 10mm BL, 1000mm OL	7321.911	169
Cleaning Brush, 2mm OD, 50mm BL, 240mm OL	6.045	168
Cleaning Brush, 2mm OD, 50mm BL, 400mm OL	6.04	168
Cleaning Brush, 3/13mm OD, 40/100mm BL, 250mm OL	6.012	169
Cleaning Brush, 3/5mm OD, 40/100mm BL, 250mm OL	6.011	169
Cleaning Brush, 3mm OD, 50mm BL, 365mm OL	6.041	168
Cleaning Brush, 3mm OD, 8mm BL, 1000mm OL	7264.691	169
Cleaning Brush, 5mm OD, 10mm BL, 2200mm OL	6.24	169
Cleaning Brush, 5mm OD, 50mm BL, 240mm OL	6.06	168
Cleaning Brush, 5mm OD, 50mm BL, 375mm OL	6.03	168
Cleaning Brush, 5mm OD, 60mm BL, 515mm OL	6.05	168
Cleaning Brush, 8mm OD, 12mm BL, 2200mm OL	6.40	169
Cleaning Brush, autoclavable, 42mm BL	86.90	169
Cleaning Gun, for water or air, with attachments	6199.00	167
Clip Applicator, 10mm OD, 340mm WL	8389.911	59
CO2 Hose	2026.62	113
CO2 Yoke	2026.64	113
Coagulation-Suction Tube, w/ stopcock valve, 5mm OD, 315mm WL	8383.73	85
Coagulation-Suction Tube, w/ stopcock valve, 5mm OD, 450mm WL	8384.73	85

Description	Product #	Page #
Coagulation-Suction Tube, w/ trumpet valve, 5mm OD, 315mm WL	8383.71	85
Coagulation-Suction Tube, w/ trumpet valve, 5mm OD, 450mm WL	8384.71	85
Collar for Diffuser 8294.03	8294.82	144
Debakey 30mm Jaw, single pc, 5mm OD, 310mm WL	8393.3227	36
Debakey 30mm Jaw, single pc, 5mm OD, 430mm WL	8394.3227	36
Debakey 40mm Jaw, single pc, 5mm OD, 310mm WL	8393.3247	36
Debakey 40mm Jaw, single pc, 5mm OD, 430mm WL	8394.3247	36
Debakey Curved Jaw, single pc, 5mm OD, 310mm WL	8393.3237	36
Debakey Curved Jaw, single pc, 5mm OD, 430mm WL	8394.3237	36
Debakey, 10mm OD, 310mm WL	8395.2352	47
Debakey, Insert, 10mm OD, 310mm WL	8395.235	47
Device stop for Hulka clip applicator w/ 8914.402	8388.991	18
Diffuser for Powder Spray	8294.03	144
Dilatation Set, 10 to 12.5mm	8924.931	107
Dilatation Set, 10 to 15mm	8943.911	108
Dilatation Set, 10-15mm	8943.601	105
Dilatation Set, 5.5 to 10mm	8934.95	107
Dissector, 7mm OD, 450mm WL	8243.502	138
Dissector, Dolphin Nose, single pc, 5mm OD, 310mm WL	8393.4628	37
Dissector, Dolphin Nose, single pc, 5mm OD, 430mm WL	8394.4628	37
Dissector, Long Nose, single pc, 5mm OD, 310mm WL	8393.2298	37
Dissector, Maryland, 10mm OD, 310mm WL	8395.2252	47
Dissector, Maryland, 3.5mm OD, 240mm WL	8390.2054	24
Dissector, Maryland, 3.5mm OD, 310mm WL	8391.2054	24
Dissector, Maryland, Insert, 10mm OD, 310mm WL	8395.225	47
Dissector, Maryland, Insert, 3.5mm OD, 240mm WL	8390.205	24
Dissector, Maryland, Insert, 3.5mm OD, 310mm WL	8391.205	24
Dissector, Right Angle, 10mm OD, 310mm WL	8395.2262	48
Dissector, Right Angle, Insert, 10mm OD, 310mm WL	8395.226	48
Dissector, Right Angle, single pc, 10mm OD, 310mm WL	8395.2267	50
Dissector, Straight, 2mm OD, 240mm WL	8756.101	23
Dissector, Tapered, Insert, Modu-line, 5mm OD, 310mm WL	8393.289	25
Dissector, Tapered, Modu-line, 5mm OD, 310mm WL	8393.2894	25

Alpha Index

Description	Product #	Page #
Dolphin Nose Dissector, Insert, Modu-line, 5mm OD, 310mm WL	8393.285	27
Dolphin Nose Dissector, Modu-line, 5mm OD, 310mm WL	8393.2853	27
Dolphin Nose Dissector, single pc, 5mm OD, 310mm WL	8393.4628	37
Dolphin Nose Dissector, single pc, 5mm OD, 430mm WL	8394.4628	37
Drape, Camera, sterile, pkg of 50	5510.891	175
Electrode, Button, 3.5mm OD, 310mm WL	8379.462	74
Electrode, Button, 3mm OD, 450mm WL	8380.40	73
Electrode, Button, 5mm OD, 330mm WL	8383.40	75, 146
Electrode, Button, 5mm OD, 450mm WL	8384.40	75
Electrode, Button, flexible, 5 Fr., 395mm WL	823.05	11
Electrode, Button, flexible, 6 Fr.	823.06	73
Electrode, Button, w/ suction-irrigation channel, 5mm OD, 310mm WL	8383.813	79
Electrode, Hook, 3.5mm OD, 310mm WL	8379.452	74
Electrode, Hook, 5mm OD, 340mm WL	8383.423	75
Electrode, Hook, 5mm OD, 420mm WL	8384.423	75
Electrode, Hook, Curved tip, 5mm OD, 340mm WL	8242.301	146
Electrode, Hook, w/ suction-irrigation channel, 5mm OD, 310mm WL	8383.812	79
Electrode, J-Hook, 5mm OD, 340mm WL	8383.425	75
Electrode, J-Hook, 5mm OD, 420mm WL	8384.425	75
Electrode, Needle, 3.5mm OD, 310mm WL	8379.482	74
Electrode, Needle, 5mm OD, 340mm WL	8383.426	75
Electrode, Needle, flexible, 5 Fr., 395mm WL	824.05	11
Electrode, Spatula, 5mm OD, 340mm WL	8383.428	75
Electrode, Spatula, w/ suction-irrigation channel, 5mm OD, 310mm	8383.811	79
End Cap, proximal	8852.90	84
EndoMotion, mechanical support arm	37500.001	175
Eragon Bipolar Forceps, Blunt Grasper, 5mm OD, 310mm WL	83930.0352	70
Eragon Bipolar Forceps, Blunt Grasper, Insert, 5mm OD, 310mm WL	83930.035	70
Eragon Bipolar Forceps, Dolphin Grasper, 5mm OD, 310mm WL	83930.0332	70
Eragon Bipolar Forceps, Dolphin Grasper, Insert, 5mm OD, 310mm WL	83930.033	70
Eragon Bipolar Forceps, Maryland Dissector, 5mm OD, 310mm WL	83930.0322	70

Description	Product #	Page #
Eragon Bipolar Forceps, Maryland Dissector, Insert, 5mm OD, 310mm	83930.032	70
Eragon Bipolar Forceps, Metz Scissors, 5mm OD, 310mm WL	83930.0412	70
Eragon Bipolar Forceps, Metz Scissors, Insert, 5mm OD, 310mm WL	83930.041	70
Eragon Bipolar Forceps, Rectangular Fenestrated Grasper, 5mm OD,	83930.0342	70
Eragon Bipolar Forceps, Rectangular Fenestrated Grasper, Insert, 5mm OD,	83930.034	70
Eragon Bipolar Forceps, Tissue Retaining Pin, 5mm OD, 310mm WL	83930.0362	70
Eragon Bipolar Forceps, Tissue Retaining Pin, Insert, 5mm OD,	83930.036	70
Eragon Bipolar Forceps, Triangular Fenestrated Grasper, 5mm OD,	83930.0312	70
Eragon Bipolar Forceps, Triangular Fenestrated Grasper, Insert, 5mm OD,	83930.031	70
Eragon Bipolar Handle, non-ratcheted	83930.0102	70
Eragon Bipolar Sheath, non-insulated, 5mm OD, 310mm WL	83930.921	70
Eyepiece, RW Mount	8885.901	184
Fascial Closure Forceps, 2mm OD	8756.201	110
Fascial Closure Guide, 10-12mm defects	8934.915	110
Fascial Closure Guide, 12-15mm defects	8943.915	110
Fascial Closure Guide, 15-20mm defects	8945.915	110
Fascial Closure Kit, grasper plus 3 cones and tray	8756.205	110
Filters, for gas warming tubing,box/10	4171.111	113
Flush Port Cap, metal, 3mm luer	887.00	184
Flush Port Caps, plastic, replacement, pkg of 10	88.944	184
Forceps, 3 Fr., flexible, biopsy, 950mm WL	829.601	19
Forceps, 3 Fr., flexible, grasper, 950mm WL	828.651	19
Gas Warming Tubing Set, for insufflator, reusable	8170.201	113
Gastric Band Introducer, 8mm OD, 330mm WL	8397.6557	52
Gastric Band Manipulator / Esophageal Dissector, 10mm OD,	97.6542S01	52
Gastric Band Manipulator / Esophageal Dissector, Insert, 10mm	397.654S01	52
Gastric Band Manipulator, single pc, 5mm OD, 340mm WL	8393.6557	52
Generator, Bipolar	2352.011	71
Grasper Dissector, Fenestrated, single pc, 5mm OD, 310mm WL	8393.2418	37
Grasper for Fine Structures, Insert, Modu-line, 5mm OD, 310mm WL	8393.196	31
Grasper for Fine Structures, Insert, Modu-line, 5mm OD, 430mm WL	8394.196	31
Grasper for Fine Structures, Modu-line, 5mm OD, 310mm WL	8393.1964	31

Alpha Index

Description	Product #	Page #
Grasper for Fine Structures, Modu-line, 5mm OD, 430mm WL	8394.1964	31
Grasper S/A 15mm, Insert, Modu-line, 5mm OD, 310mm WL	8393.185	28
Grasper S/A 15mm, Modu-line, 5mm OD, 310mm WL	8393.1854	28
Grasper S/A 20mm, Insert, Modu-line, 5mm OD, 310mm WL	8393.184	28
Grasper S/A 20mm, Insert, Modu-line, 5mm OD, 430mm WL	8394.184	28
Grasper S/A 20mm, Modu-line, 5mm OD, 310mm WL	8393.1844	28
Grasper S/A 20mm, Modu-line, 5mm OD, 430mm WL	8394.1844	28
Grasper, 2 Teeth, Insert, Modu-line, 5mm OD, 310mm WL	8393.490	27
Grasper, 2 Teeth, Insert, Modu-line, 5mm OD, 430mm WL	8394.490	27
Grasper, 2 Teeth, Modu-line, 5mm OD, 430mm WL	8394.4902	27
Grasper, 2/3 Teeth, 10mm OD, 310mm WL	8395.2042	47
Grasper, 2/3 Teeth, Insert, 10mm OD, 310mm WL	8395.204	47
Grasper, 2/3 Teeth, single pc, 10mm OD, 310mm WL	8385.10	51
Grasper, 2/3 Teeth, single pc, 10mm OD, 310mm WL	8395.2047	50
Grasper, 3 Teeth, Modu-line, 5mm OD, 310mm WL	8393.4902	27
Grasper, Alligator, 10mm OD, 310mm WL	8395.2362	47
Grasper, Alligator, Insert, 10mm OD, 310mm WL	8395.236	47
Grasper, Alligator, single pc, 10mm OD, 310mm WL	8385.13	51
Grasper, Alligator, single pc, 5mm OD, 310mm WL	8383.08	43
Grasper, Alligator, single pc, 5mm OD, 310mm WL	8393.4159	35
Grasper, Atraumatic Blunt, single pc, 5mm OD, 310mm WL	8383.036	41
Grasper, Atraumatic Bowel, 10mm OD, 310mm WL	8395.2152	47
Grasper, Atraumatic Bowel, Insert, 10mm OD, 310mm WL	8395.215	47
Grasper, Atraumatic Bowel, single pc, 5mm OD, 310mm WL	8393.4947	35
Grasper, Atraumatic Bowel, single pc, 5mm OD, 430mm WL	8394.4947	35
Grasper, Atraumatic Fenestrated, Insert, Modu-line, 5mm OD, 240mm	8392.181	26
Grasper, Atraumatic Fenestrated, Insert, Modu-line, 5mm OD, 310mm	8393.181	26
Grasper, Atraumatic Fenestrated, Insert, Modu-line, 5mm OD, 430mm	8394.181	26
Grasper, Atraumatic Fenestrated, Modu-line, 5mm OD, 240mm WL	8392.1814	26
Grasper, Atraumatic Fenestrated, Modu-line, 5mm OD, 310mm WL	8393.1814	26
Grasper, Atraumatic Fenestrated, Modu-line, 5mm OD, 430mm WL	8394.1814	26
Grasper, Atraumatic Fenestrated, single pc, 5mm OD, 310mm WL	8383.037	41
Grasper, Atraumatic Fenestrated, single pc, 5mm OD, 310mm WL	8383.141	42
Grasper, Atraumatic Fenestrated, single pc, 5mm OD, 310mm WL	8393.2049	36
Grasper, Atraumatic Fenestrated, single pc, 5mm OD, 430mm WL	8384.141	42
Grasper, Atraumatic Paddle, 10mm OD, 310mm WL	8395.5042	48
Grasper, Atraumatic Paddle, Insert, 10mm OD, 310mm WL	8395.504	48
Grasper, Atraumatic with cup, single pc, 5mm OD, 310mm WL	8393.2368	37
Grasper, Atraumatic with cup, single pc, 5mm OD, 310mm WL	8393.2369	37
Grasper, Atraumatic without cup, single pc, 5mm OD, 310mm WL	8393.2268	37
Grasper, Atraumatic without cup, single pc, 5mm OD, 310mm WL	8393.2269	37
Grasper, Atraumatic without cup, single pc, 5mm OD, 430mm WL	8394.2268	37
Grasper, Atraumatic, 2mm OD, 240mm WL	8756.111	23
Grasper, Atraumatic, 3.5mm OD, 240mm WL	8390.2044	24
Grasper, Atraumatic, 3.5mm OD, 310mm WL	8391.2044	24
Grasper, Atraumatic, Insert, 3.5mm OD, 240mm WL	8390.204	24
Grasper, Atraumatic, Insert, 3.5mm OD, 310mm WL	8391.204	24
Grasper, Atraumatic, single pc, 5mm OD, 310mm WL	8383.142	42
Grasper, Babcock, 10mm OD, 310mm WL	8395.2142	47
Grasper, Babcock, 3.5mm OD, 240mm WL	8390.2554	24
Grasper, Babcock, 3.5mm OD, 310mm WL	8391.2554	24
Grasper, Babcock, Insert, 10mm OD, 310mm WL	8395.214	47
Grasper, Babcock, Insert, 3.5mm OD, 240mm WL	8390.255	24
Grasper, Babcock, Insert, 3.5mm OD, 310mm WL	8391.255	24
Grasper, Babcock, single pc, 10mm OD, 310mm WL	8395.2147	50
Grasper, Babcock, single pc, 5mm OD, 310mm WL	8393.3257	36
Grasper, Bullet Nose, single pc, 5mm OD, 310mm WL	8393.2349	36
Grasper, Debakey 30mm Jaw, single pc, 5mm OD, 310mm WL	8393.3227	36

Alpha Index

Description	Product #	Page #
Grasper, Debakey 30mm Jaw, single pc, 5mm OD, 430mm WL	8394.3227	36
Grasper, Debakey 40mm Jaw, single pc, 5mm OD, 310mm WL	8393.3247	36
Grasper, Debakey 40mm Jaw, single pc, 5mm OD, 430mm WL	8394.3247	36
Grasper, Debakey Curved Jaw, single pc, 5mm OD, 310mm WL	8393.3237	36
Grasper, Debakey Curved Jaw, single pc, 5mm OD, 430mm WL	8394.3237	36
Grasper, Debakey, 10mm OD, 310mm WL	8395.2352	47
Grasper, Debakey, Insert, 10mm OD, 310mm WL	8395.235	47
Grasper, Fenestrated, Insert, Modu-line, 5mm OD, 310mm WL	8393.183	25
Grasper, Fenestrated, Modu-line, 5mm OD, 310mm WL	8393.1833	25
Grasper, Fine Structures, single pc, 5mm OD, 310mm WL	8383.14	42
Grasper, Fine Structures, single pc, 5mm OD, 310mm WL	8393.2659	35
Grasper, Fine Structures, single pc, 5mm OD, 430mm WL	8384.14	42
Grasper, Fine Structures, single pc, 5mm OD, 430mm WL	8394.2659	35
Grasper, Grooved Plates, single pc, 5mm OD, 310mm WL	8383.41	43
Grasper, Mixter Rt Angle, single pc, 5mm OD, 310mm WL	8393.4149	35
Grasper, Paddle Babcock, single pc, 5mm OD, 310mm WL	8393.3267	36
Grasper, Paddle Babcock, single pc, 5mm OD, 430mm WL	8394.3267	36
Grasper, Pike Mouth, Insert, Modu-line, 5mm OD, 310mm WL	8393.483	30
Grasper, Pike Mouth, Modu-line, 5mm OD, 310mm WL	8393.4834	30
Grasper, Plate Shaped, 10mm OD, 310mm WL	8395.2342	47
Grasper, Plate Shaped, Insert, 10mm OD, 310mm WL	8395.234	47
Grasper, Retraction 2 Teeth, Insert, Modu-line, 5mm OD, 310mm WL	8393.489	27
Grasper, Retraction 2 Teeth, Insert, Modu-line, 5mm OD, 430mm WL	8394.489	27
Grasper, Retraction 2 Teeth, Modu-line, 5mm OD, 310mm WL	8393.4892	27
Grasper, Retraction 2 Teeth, Modu-line, 5mm OD, 430mm WL	8394.4892	27
Grasper, Retraction 2 Teeth, single pc, 5mm OD, 310mm WL	8393.4897	35
Grasper, Retraction 2 Teeth, single pc, 5mm OD, 430mm WL	8394.4897	35
Grasper, Spoon, 10mm OD, 310mm WL	8395.2442	48
Grasper, Spoon, Insert, 10mm OD, 310mm WL	8395.244	48

Description	Product #	Page #
Grasper, Spoon, single pc, 10mm OD, 310mm WL	8385.12	51
Grasper, Spoon, single pc, 10mm OD, 310mm WL	8395.2447	50
Grasper, Tapered 14mm, Insert, Modu-line, 5mm OD, 310mm WL	8393.288	26
Grasper, Tapered 14mm, Modu-line, 5mm OD, 310mm WL	8393.2884	26
Grasper, Tubal, single pc, 5mm OD, 310mm WL	8393.2178	37
Grasper, Universal, 10mm OD, 310mm WL	8395.2242	47
Grasper, Universal, 2mm OD, 240mm WL	8756.121	23
Grasper, Universal, 3.5mm OD, 240mm WL	8390.2544	24
Grasper, Universal, 3.5mm OD, 310mm WL	8391.2544	24
Grasper, Universal, Insert, 10mm OD, 310mm WL	8395.224	47
Grasper, Universal, Insert, 3.5mm OD, 240mm WL	8390.254	24
Grasper, Universal, Insert, 3.5mm OD, 310mm WL	8391.254	24
Grasper, Universal, single pc, 5mm OD, 310mm WL	8393.2549	35
Grasper, Wave Serrations, single pc, 5mm OD, 310mm WL	8393.2468	37
Grasper, Wave Side DA, Insert, Modu-line, 5mm OD, 310mm WL	8393.293	30
Grasper, Wave Side DA, Insert, Modu-line, 5mm OD, 430mm WL	8394.293	30
Grasper, Wave Side DA, Modu-line, 5mm OD, 310mm WL	8393.2932	30
Grasper, Wave Side DA, Modu-line, 5mm OD, 430mm WL	8394.2932	30
Grasper, Wave Side DA, single pc, 5mm OD, 310mm WL	8393.2937	35
Grasper, Wave Side DA, single pc, 5mm OD, 430mm WL	8394.2937	35
Grasper, Wave Side SA, Insert, Modu-line, 5mm OD, 310mm WL	8393.292	30
Grasper, Wave Side SA, Insert, Modu-line, 5mm OD, 430mm WL	8394.292	30
Grasper, Wave Side SA, Modu-line, 5mm OD, 310mm WL	8393.2922	30
Grasper, Wave Side SA, Modu-line, 5mm OD, 430mm WL	8394.2922	30
Grasper, Wave Side SA, single pc, 5mm OD, 310mm WL	8393.2927	35
Grasper, Wave Side SA, single pc, 5mm OD, 430mm WL	8394.2927	35
Grasper, with 1 Tooth, Insert, Modu-line, 5mm OD, 310mm WL	8393.486	31
Grasper, with 1 Tooth, Modu-line, 5mm OD, 310mm WL	8393.4864	31
Grasper, with 2 Teeth, Insert, Modu-line, 5mm OD, 310mm WL	8393.487	31

Alpha Index

Description	Product #	Page #
Grasper, with 2 Teeth, Insert, Modu-line, 5mm OD, 430mm WL	8394.487	31
Grasper, with 2 Teeth, Modu-line, 5mm OD, 310mm WL	8393.4874	31
Grasper, with 2 Teeth, Modu-line, 5mm OD, 430mm WL	8394.4874	31
Grasper, with Blunt Teeth, Insert, Modu-line, 5mm OD, 310mm WL	8393.485	31
Grasper, with Blunt Teeth, Modu-line, 5mm OD, 310mm WL	8393.4854	31
Grasper, with Cup, Insert, Modu-line, 5mm OD, 310mm WL	8393.287	25
Grasper, with Cup, Modu-line, 5mm OD, 310mm WL	8393.2873	25
Grasper, with Cup, single pc, 5mm OD, 310mm WL	8383.127	40
Grasping Forceps, 5 Fr., 385 mm WL	8746.621	11
Guide Rod, 10 to 15mm	8943.901	107
Guide Rod, 5.5 to 10mm	8934.951	107
Guide, Telescope, to use 7mm scope with 8960.02/.03	8960.97	150
Hand Blower, sterile, box of 5	127.0005	126
Handle Assembly, Open Spring, for bipolar forceps, 5mm OD, 290mm WL	8383.974	68
Handle Assembly, Open Spring, for bipolar forceps, 5mm OD, 445mm WL	8384.974	68
Handle Assembly, Scissor Style, for bipolar forceps, 5mm OD, 320mm WL	8383.210	65
Handle Assembly, Scissor Style, for bipolar forceps, 5mm OD, 455mm WL	8384.210	65
Handle Assembly, Syringe Style, for bipolar forceps, 5mm OD, 320mm WL	8383.240	64
Handle Assembly, Syringe Style, for bipolar forceps, 5mm OD, 430mm WL	8384.240	64
Handle, Axial, for modular forceps, ratcheted, w/o HF	8393.941	55
Handle, for modular forceps, axial, w/ HF	8393.0005	24
Handle, for modular forceps, non-ratcheted, w/ HF	8393.0003	26
Handle, for modular forceps, non-ratcheted, w/o HF	8393.0001	57
Handle, for modular forceps, ratcheted, w/ HF	8393.0004	26
Handle, for modular forceps, ratcheted, w/o HF	8393.0002	26
Handle, Sliding, for bipolar forceps	8393.974	66
Handle, Spring, for bipolar forceps	8393.975	63
Hasson Sliding Cone, for 10mm trocars	8934.901	103
Hook Punch, Insert, Modu-line, 5mm OD, 310mm WL	8393.082	33
Hook Punch, Insert, Modu-line, 5mm OD, 430mm WL	8394.082	33
Hook Punch, Modu-line, 5mm OD, 310mm WL	8393.0823	33
Hook Punch, Modu-line, 5mm OD, 430mm WL	8394.0823	33

Description	Product #	Page #
Hose, CO2	2026.62	113
I.V. Pole, w/ 5 arm base	2215.974	81
Insertion Sleeve	8383.00	87
Instrument Port, detachable, with stopcock, for operating laparoscopes	8911.316	17
Instrument Port, detachable, with stopcock, for operating laparoscopes	8914.315	18
Insufflator, 40 L/min, laparoscopic CO2	2236.6011	113
Insufflator, CO2, 30 l/min	2232.601	112
Insufflator, CO2, 30 l/min, w/ gas warming feature	2232.621	112
Introducer, Gastric Band, 8mm OD, 330mm WL	8397.6557	52
Introducing Sleeve 5/ 10mm	8934.981	45
Introducing Sleeve for 8389.911	8389.991	59
Irrigation attachment, w/ 2 way tap	8383.819	79
Kleppinger, Spare Parts, finger guide	N230049	181
Kleppinger, Spare Parts, guide tubing	15181.002	181
Kleppinger, Spare Parts, guide tubing	15181.003	181
Kleppinger, Spare Parts, guide tubing for syringe style	N900128	181
Kleppinger, Spare Parts, guide tubing for syringe style	N900129	181
Kleppinger, Spare Parts, handle assembly scissor style	N900177	181
Kleppinger, Spare Parts, hex head screw	N110061	181
Kleppinger, Spare Parts, outer shaft	N900191	181
Kleppinger, Spare Parts, outer shaft	N900193	181
Kleppinger, Spare Parts, screw for scissor handle	N110092	181
Kleppinger, Spare Parts, sealing cap housing	15072.014	181
Kleppinger, Spare Parts, thumb ring assembly	N900132	181
Knot Pusher, 5 Fr., 410mm WL	8746.801	11
Knot Pusher, 5mm OD, 240mm WL	8243.461	148
Knot Pusher, Extracorporeal w/ distal notch, 5mm OD, 330mm WL	8383.552	58
Knot Pusher, Extracorporeal, 5mm OD, 330mm WL	8383.551	57
Knot Pusher, Extracorporeal, Insert, Modu-line, 5mm OD, 310mm WL	8393.345	57
Knot Pusher, Extracorporeal, Modu-line, 5mm OD, 310mm WL	8393.3451	57
Knot Pusher, IntraAbdominal, 5mm OD, 330mm WL	8383.55	57
Laparopump, for suction-irrigation	2215.002	80
Laparoscope, 10mm OD, 0 degree, 300mm WL	8934.431	14, 132
Laparoscope, 10mm OD, 30 degree, 300mm WL	8934.432	14, 132
Laparoscope, 10mm OD, 50 degree, 300mm WL	8934.433	14, 132
Laparoscope, 3.3mm OD, 70 degree, 300mm WL	8660.425	9

Alpha Index

Description	Product #	Page #
Laparoscope, 3.5mm OD, 0 degree, 180mm WL	8930.461	9
Laparoscope, 3.5mm OD, 0 degree, 300mm WL	8930.421	9
Laparoscope, 3.5mm OD, 30 degree, 300mm WL	8930.422	9
Laparoscope, 5mm OD Full Screen, 0 degree, 300mm WL	8935.441	12
Laparoscope, 5mm OD Full Screen, 30 degree, 300mm WL	8935.442	12
Laparoscope, 5mm OD Full Screen, 50 degree, 300mm WL	8935.443	12
Laparoscope, 7mm OD, 0 degree, 300mm WL	8933.431	13, 131
Laparoscope, 7mm OD, 30 degree, 300mm WL	8933.432	13, 131
Laparoscope, 7mm OD, 50 degree, 300mm WL	8933.433	13, 131
Laparoscope, micro, 2mm OD, 0 degree, 160mm WL	8754.451	7
Laparoscope, micro, 2mm OD, 0 degree, 270mm WL	8754.401	7
Laparoscope, Mini-Operating, 3.8mm OD, 12 degree, 300mm WL	8746.401	10
Laparoscope, Operating, 10mm OD, oblique angle, 0 degree, 267mm WL,	8915.402	16, 134
Laparoscope, Operating, 10mm OD, right angle, 0 degree, 265mm WL,	8912.402	17, 133
Laparoscope, Operating, 12.5mm OD, right angle, 0 degree, 267mm WL,	8914.402	18
Ligature Loop Applicator, 5mm OD, 155mm WL	8383.78	58
Light cable adapter, Wolf scope to ACMI Gyrus cable	8087.00	179
Light cable adapter, Wolf scope to Olympus cable	8088.80	179
Light cable adapter, Wolf scope to Olympus WA03 cable	8088.81	179
Light cable adapter, Wolf scope to Storz cable	8088.00	179
Light Cable, 2.5mm bundle, 3M	8061.0256	180
Light Cable, 3.5mm bundle, 3M	8061.0356	180
Light Cable, 4.5mm bundle, 3M	8061.0456	180
Light Cable, double, for using 2 instruments, 3.5mm diameter	8062.35	180
Light Cable, fiberoptic, 1.6mm bundle, 1.8M length	8061.16	19
Light Cable, translucent, blue, 3.5mm bundle, 3M	8069.356	180
Light Cable, translucent, green, 2.5mm bundle, 3M	8069.256	180
Light Cable, translucent, purple, 4.5mm bundle, 3M	8069.456	180
Light source adapter, Wolf cable to Dyonics Stryker light source	8094.00	178
Light source adapter, Wolf cable to Fuji light source	8096.85	178

Description	Product #	Page #
Light source adapter, Wolf cable to Gyrus ACMI light source	8083.10	178
Light source adapter, Wolf cable to Machida light source	8097.11	178
Light source adapter, Wolf cable to Olympus light source	8096.811	178
Luer Connector, female, 3mm	891.00	184
Luer Connector, female, 4mm	891.011	184
Luer Connector, male, 3mm	886.00	184
Luer Connector, male, 4mm	886.01	184
Luer Lock Cap, 4mm	887.01	184
Luer Lock Connector, 2-way stopcock, male, 3mm	883.00	184
Luer Lock Connector, 2-way stopcock, male, 4mm	883.01	184
Luer Lock Connector, 2-way water inlet, male, 4mm	883.12	184
Lung Grasping Forceps, 5mm OD, 270mm WL	8242.611	142
Maryland Dissector w/ cross serrations, single pc, 5mm OD,	8393.2958	37
Maryland Dissector w/ cross serrations, single pc, 5mm OD,	8394.2958	37
Maryland Dissector, 10mm OD, 310mm WL	8395.2252	47
Maryland Dissector, 3.5mm OD, 240mm WL	8390.2054	24
Maryland Dissector, 3.5mm OD, 310mm WL	8391.2054	24
Maryland Dissector, Insert, 10mm OD, 310mm WL	8395.225	47
Maryland Dissector, Insert, 3.5mm OD, 240mm WL	8390.205	24
Maryland Dissector, Insert, 3.5mm OD, 310mm WL	8391.205	24
Maryland Dissector, Insert, Modu-line, 5mm OD, 240mm WL	8392.281	25
Maryland Dissector, Insert, Modu-line, 5mm OD, 310mm WL	8393.281	25
Maryland Dissector, Insert, Modu-line, 5mm OD, 430mm WL	8394.281	25
Maryland Dissector, Modu-line, 5mm OD, 240mm WL	8392.2814	25
Maryland Dissector, Modu-line, 5mm OD, 310mm WL	8393.2814	25
Maryland Dissector, Modu-line, 5mm OD, 430mm WL	8394.2814	25
Maryland Dissector, single pc, 5mm OD, 310mm WL	8393.2058	37
Maryland Dissector, single pc, 5mm OD, 430mm WL	8394.2058	37
Mediastinal Cannula, 2mm OD, 260mm WL	8188.11	154
Mediastinoscope, Freiburg, 140mm WL	8960.02	150
Mediastinoscope, Freiburg, 170mm WL	8960.03	150

Alpha Index

Description	Product #	Page #
Mediastinoscope, Video, with integrated optics, adjustable blades	8783.412	149
Mediastinoscope, Video, with integrated optics, fixed blade	8784.411	149
Mediastinoscopy Coag-Aspirator, 2.8mm OD, 210mm WL	8291.101	155
Mediastinoscopy Coag-Aspirator, 4mm OD, 210mm WL	8291.102	155
Mediastinoscopy Coag-Suction Tube, 5mm OD, 250mm WL	8188.02	155
Mediastinoscopy Forceps, Tumor Grasper, 3mm OD, 260mm WL	8280.26	152
Mediastinoscopy Forceps, Universal Grasper, 3mm OD, 260mm WL	8280.22	152
Membrane Filter, for Powder Spray, pk of 50	2148.95	144
Metal instrument port fitting	15256.382	10, 184
Microforceps, Grasper, curved left, 2.6mm OD, 215mm WL	8254.601	151
Microforceps, Grasper, curved right, 2.6mm OD, 215mm WL	8254.602	151
Mixter Dissector, 10mm OD, 310mm WL	8395.2262	48
Mixter Dissector, Insert, 10mm OD, 310mm WL	8395.226	48
Mixter Dissector, Insert, Modu-line, 5mm OD, 310mm WL	8393.283	29
Mixter Dissector, Modu-line, 5mm OD, 310mm WL	8393.2834	29
Mixter Dissector, single pc, 10mm OD, 310mm WL	8395.2267	50
Mixter Dissector, single pc, 5mm OD, 310mm WL	8393.4149	35
Mounting rail for 2215.002	31110.901	81
Myoma screw, 10mm	8385.301	60
Myoma screw, 5mm	8383.611	60
Needle Holder, Curved Left, 5mm OD, 340mm WL	8393.512	55
Needle Holder, Curved Left, 5mm OD, 430mm WL	8394.512	55
Needle Holder, Curved Left, Insert, 5mm OD, 340mm WL	8393.515	55
Needle Holder, Curved Left, Insert, 5mm OD, 430mm WL	8394.515	55
Needle Holder, Curved Right, 5mm OD, 340mm WL	8393.511	55
Needle Holder, Curved Right, 5mm OD, 430mm WL	8394.511	55
Needle Holder, Curved Right, Insert, 5mm OD, 340mm WL	8393.514	55
Needle Holder, Curved Right, Insert, 5mm OD, 430mm WL	8394.514	55
Needle Holder, Curved, 5mm OD, 300mm WL	8242.451	147
Needle Holder, Sarbu, 5mm OD, 340mm WL	8393.503	55
Needle Holder, Sarbu, 5mm OD, 430mm WL	8394.503	55

Description	Product #	Page #
Needle Holder, Sarbu, Insert, 5mm OD, 340mm WL	8393.506	55
Needle Holder, Sarbu, Insert, 5mm OD, 430mm WL	8394.506	55
Needle Holder, Serrated Straight, 5mm OD, 340mm WL	8393.501	55
Needle Holder, Serrated Straight, Insert, 5mm OD, 340mm WL	8393.504	55
Needle Holder, Straight, 10mm OD, 340mm WL	8395.521	55
Needle Holder, Straight, 3.5mm OD, 340mm WL	8391.501	55
Needle Holder, Straight, 5mm OD, 310mm WL	8383.533	56, 147
Needle Holder, Straight, 5mm OD, 340mm WL	8393.502	55
Needle Holder, Straight, 5mm OD, 430mm WL	8394.502	55
Needle Holder, Straight, Insert, 10mm OD, 340mm WL	8395.524	55
Needle Holder, Straight, Insert, 3.5mm OD, 340mm WL	8391.504	55
Needle Holder, Straight, Insert, 5mm OD, 340mm WL	8393.505	55
Needle Holder, Straight, Insert, 5mm OD, 430mm WL	8394.505	55
Obturator, 10mm OD, 100mm WL, blunt	8934.15	103
Obturator, 10mm OD, 150mm WL, blunt	8934.175	103
Optical Forceps, Rigid, Biopsy, 5mm OD, 295mm WL	8913.60	139
O-Ring, for faceplate 8840.241	15364.067	126
O-Ring, for rotatable stopcock	15364.068	184
O-Ring, for TEM irrigation bottle adapter 8383.951	N120030	126
O-Ring, for TEM irrigation bottle adapter 8383.952/953	N160044	126
Outer Sheath, for bipolar sliding handle, 3.5mm OD, 340mm WL	8391.921	63
Outer Sheath, for bipolar sliding handle, 3.5mm OD, 440mm WL	8389.921	NA
Outer Sleeve, for bipolar forceps, 5mm OD, 320mm WL	8393.924	66
Outer Sleeve, for bipolar forceps, 5mm OD, 320mm WL	8393.925	67
Outer Sleeve, for bipolar forceps, 5mm OD, 450mm WL	8394.924	66
Outer Sleeve, for bipolar forceps, 5mm OD, 450mm WL	8394.925	67
Parenchyma Forceps, 30mm Jaw Curved Left, 5mm OD, 260mm WL	8242.601	141
Parenchyma Forceps, 30mm Jaw Curved Right, 5mm OD, 260mm WL	8242.602	141
Parenchyma Forceps, 50mm Jaw Curved Left, 5mm OD, 260mm WL	8242.603	141
Parenchyma Forceps, 50mm Jaw Curved Right, 5mm OD, 260mm WL	8242.604	141

Alpha Index

Description	Product #	Page #
Petelin Dissector 30° angle, single pc, 5mm OD, 315mm WL	8383.581	45
Petelin Dissector 60° angle, single pc, 5mm OD, 315mm WL	8383.582	45
Petelin Dissector w/o spring action, single pc, 5mm OD, 315mm WL	8383.571	45
Petelin Dissector, 30° left, Insert, Modu-line, 5mm OD, 310mm WL	8393.282	29
Petelin Dissector, 30° left, Modu-line, 5mm OD, 310mm WL	8393.2824	29
Petelin Dissector, single pc, 5mm OD, 310mm WL	8393.2148	37
Plastic housing, grey, for sealing cap on 8911.311	15176.097	17, 133
Plate Shaped Grasper, 10mm OD, 310mm WL	8395.2342	47
Plate Shaped Grasper, Insert, 10mm OD, 310mm WL	8395.234	47
Plate Shaped Grasper, Insert, Modu-line, 5mm OD, 310mm WL	8393.182	28
Plate Shaped Grasper, Modu-line, 5mm OD, 310mm WL	8393.1824	28
Pleural Abrader, 4.5mm OD, 500mm WL	8294.701	144
Pleural Needle, 2.8mm, 80mm WL	8294.751	148
Pole for mounting rail and clamps	31110.905	81
PowerBlade Bipolar Forcep, w/ Valleylab connector, 5mm OD, 310mm	4393.2865	69
PowerBlade Bipolar Forcep, w/ Valleylab connector, 5mm OD, 430mm	4394.2865	69
PowerBlade Bipolar Forcep, w/ Wolf connector, 5mm OD, 310mm WL,	4393.3865	69
PowerBlade Bipolar Forcep, w/ Wolf connector, 5mm OD, 430mm WL,	4394.3865	69
Probe, 7mm OD, 450mm WL	8243.901	138
Probe, Blunt, 5 Fr., 410mm WL	8746.701	11
Probe, graduated, 5mm OD, 445 mm WL	8384.66	89
Probe, grey matte, 5mm OD, 320mm WL	8383.662	89
Probe, grey matte, 5mm OD, 445mm WL	8384.662	89
Probe, Guide, 4mm OD, 590mm WL	8242.951	138
Probe, w/ cm markings, 5mm OD, 320mm WL	8383.661	89
Probe, w/ cm markings, 5mm OD, 445mm WL	8384.661	89
Reducing Caps, reduce to 10mm, pkg/5	8924.802	109
Reducing Caps, reduce to 5.5mm, pkg/5	8923.802	109
Reducing Sleeve, 10 to 5mm	8934.98	109
Retraction Grasper 2 Teeth, Insert, Modu-line, 5mm OD, 310mm WL	8393.489	27
Retraction Grasper 2 Teeth, Insert, Modu-line, 5mm OD, 430mm WL	8394.489	27
Retraction Grasper 2 Teeth, Modu-line, 5mm OD, 310mm WL	8393.4892	27

Description	Product #	Page #
Retraction Grasper 2 Teeth, Modu-line, 5mm OD, 430mm WL	8394.4892	27
Retraction Grasper 2 Teeth, single pc, 5mm OD, 310mm WL	8393.4897	35
Retraction Grasper 2 Teeth, single pc, 5mm OD, 430mm WL	8394.4897	35
Retractor, Deaver, set of 2, 12mm OD, 170mm WL	8928.90	60
Retractor, Liver, 5mm	8383.6917	53
Retractor, Tissue, curved, 7mm OD, 320mm WL	8243.701	143
Retractor, Tissue, straight, 5mm OD, 320mm WL	8383.691	60
Right Angle Dissector, 10mm OD, 310mm WL	8395.2262	48
Right Angle Dissector, Insert, 10mm OD, 310mm WL	8395.226	48
Right Angle Dissector, single pc, 10mm OD, 310mm WL	8395.2267	50
Right Angle Dissector, single pc, 5mm OD, 310mm WL	8393.4149	35
Scissors, Curved Left, 10mm OD, 310mm WL	8395.0051	49
Scissors, Curved Left, Insert, 10mm OD, 310mm WL	8395.005	49
Scissors, Hook, 3.5mm OD, 310mm WL	8391.0143	24
Scissors, Hook, Insert, 3.5mm OD, 310mm WL	8391.014	24
Scissors, Hook, Insert, Modu-line, 5mm OD, 310mm WL	8393.081	34
Scissors, Hook, Insert, Modu-line, 5mm OD, 430mm WL	8394.081	34
Scissors, Hook, Modu-line, 5mm OD, 310mm WL	8393.0813	34
Scissors, Hook, Modu-line, 5mm OD, 430mm WL	8394.0813	34
Scissors, Hook, single pc, 5mm OD, 310mm WL	8383.026	41
Scissors, Hook, single pc, 5mm OD, 310mm WL	8393.0068	38
Scissors, Hook, single pc, 5mm OD, 430mm WL	8384.022	41
Scissors, Hook, single pc, 5mm OD, 430mm WL	8394.0068	38
Scissors, Metz, 3.5mm OD, 240mm WL	8390.0063	24
Scissors, Metz, 3.5mm OD, 310mm WL	8391.0063	24
Scissors, Metz, 5 Fr., 380mm WL	8746.651	11
Scissors, Metz, Insert, 3.5mm OD, 240mm WL	8390.006	24
Scissors, Metz, Insert, 3.5mm OD, 310mm WL	8391.006	24
Scissors, Metz, Insert, Modu-line, 5mm OD, 240mm WL	8392.041	34
Scissors, Metz, Insert, Modu-line, 5mm OD, 310mm WL	8393.041	34

Alpha Index

Description	Product #	Page #
Scissors, Metz, Insert, Modu-line, 5mm OD, 430mm WL	8394.041	34
Scissors, Metz, Modu-line, 5mm OD, 240mm WL	8392.0413	34
Scissors, Metz, Modu-line, 5mm OD, 310mm WL	8393.0413	34
Scissors, Metz, Modu-line, 5mm OD, 430mm WL	8394.0413	34
Scissors, Metz, single pc, 5mm OD, 310mm WL	8393.0248	38
Scissors, Metz, single pc, 5mm OD, 430mm WL	8394.0248	38
Scissors, Micro, single pc, 5mm OD, 310mm WL	8382.02	44
Scissors, Micro-Metz, Insert, Modu-line, 5mm OD, 310mm WL	8393.044	34
Scissors, Micro-Metz, Modu-line, 5mm OD, 310mm WL	8393.0443	34
Scissors, Sawtooth, single pc, 5mm OD, 320mm WL	8383.46	44
Scissors, Straight, 2mm OD, 240mm WL	8756.001	23
Scissors, Straight, Insert, Modu-line, 5mm OD, 240mm WL	8392.045	34
Scissors, Straight, Insert, Modu-line, 5mm OD, 310mm WL	8393.045	34
Scissors, Straight, Insert, Modu-line, 5mm OD, 430mm WL	8394.045	34
Scissors, Straight, Modu-line, 5mm OD, 240mm WL	8392.0453	34
Scissors, Straight, Modu-line, 5mm OD, 310mm WL	8393.0453	34
Scissors, Straight, Modu-line, 5mm OD, 430mm WL	8394.0453	34
Scope adapter	8081.01	178
Scope adapter, Wolf cable to Gyrus ACMI scope	8081.00	178
Scope adapter, Wolf cable to Storz scope	8091.00	178
Scope adapter, Wolf cable to Wolf scope	8095.05	178
Scope adapter, Wolf scope to Wolf cable	8095.00	179
Scope Holder, articulating, for instruments 5mm - 12mm	8175.601	53, 174
Scope Protectors, up to 5mm OD and 20cm WL, pk of 5	8570.9205	172
Scope Protectors, up to 5mm OD and 32cm WL, pk of 5	8570.9325	172
Scope Warmer, replacement tube	8033.90	173
Scope Warmer, with 4 tube inserts	2320.002	173
Sealing attachment, closed, for 8385.901	8385.902	76
Sealing attachment, with opening, for 8385.901	8385.903	78
Sealing Cap, black, 3mm-4mm	88.03BK	184
Sealing Cap, black, 9mm-9.5mm	89.07BK	184
Sealing Cap, black, up to 2mm	89.00BK	184

Description	Product #	Page #
Sealing Cap, blue, 10mm-12mm	89.09BL	184
Sealing Cap, blue, 2mm-3mm	88.02BL	184
Sealing Cap, blue, 3mm-4mm	89.02BL	184
Sealing Cap, brown, 6mm-7mm	89.04BR	184
Sealing Cap, brown, 6mm-7mm	89.171BR	184
Sealing Cap, green, 4mm-5mm	88.04GR	184
Sealing Cap, green, 8mm-9mm	89.06GR	184
Sealing Cap, grey, 5mm-6mm	89.03GY	184
Sealing Cap, red, 13mm-14mm	89.10RE	184
Sealing Cap, red, 1mm-2mm	88.01RE	184
Sealing Cap, red, 2mm-3mm	89.01RE	184
Sealing Cap, red, 3.4mm-4.5mm	89.90RE	184
Sealing Cap, red, 9.5mm-10mm	89.08RE	184
Sealing Cap, red, long, 1mm-2mm	18.01RE	184
Sealing Cap, red, no hole	88.00RE	184
Sealing Cap, red, no hole	89.20RE	184
Sealing Cap, red, no hole	89.21RE	184
Sealing Cap, red, up to 1mm	88.005RE	184
Sealing Cap, TEM, for large port on silicone sleeve	89.141	119
Sealing Cap, yellow, 7mm-8mm	89.05YE	184
Sealing Caps, for 15mm trocar sleeve 8943.60, pkg of 10	8943.602	105
Sealing membrane, mini, pkg/10	89.101	184
Sealing membrane, pkg/10	89.103	184
Self Retaining Sleeve, 10mm	8934.301	102
Sheath, 2.8mm OD, for hysteroscope 8754.401	8754.221	7
Sheath, insulated, extended length, for modular forceps, 5mm OD, 310mm	8393.913	25
Sheath, insulated, extended length, for modular forceps, 5mm OD, 430mm	8394.913	25
Sheath, insulated, Modu-line, 5mm OD, 240mm WL	8392.913	25
Sheath, noninsulated, for modular forceps, 10mm OD, 310mm WL	8395.901	47
Sheath, noninsulated, for modular forceps, 10mm OD, 370mm WL	8397.901	48
Sleeve and Extractor, 5.5 to 10mm	8385.50	109
Sleeve w/ cap, long, for bipolar forceps	8393.978	63
Slide Ratchet Forceps, Retraction Grasper, 5mm OD, 310mm WL	8383.4897	39
Slide Ratchet Forceps, Rotatable, Retraction Grasper, 5mm OD, 310mm	8383.4895	39
Slide Ratchet Forceps, Rotatable, Wave Side DA, 5mm OD, 310mm WL	8383.2935	39
Slide Ratchet Forceps, Rotatable, Wave Side SA, 5mm OD, 310mm WL	8383.2925	39
Slide Ratchet Forceps, Wave Side DA, 5mm OD, 310mm WL	8383.2937	39
Slide Ratchet Forceps, Wave Side SA, 5mm OD, 310mm WL	8383.2927	39
Sliding Sleeve, for bipolar forceps, 5mm OD, 320mm WL	8393.923	66
Sliding Sleeve, for bipolar forceps, 5mm OD, 450mm WL	8394.923	66
Spacers for mounting rail	75093.052	81
Sponge Forceps	8279.01	153

Alpha Index

Description	Product #	Page #
Sponger, 5mm OD, 300mm WL	8148.02	139, 153
Spoon Forceps, 10mm OD, 310mm WL	8395.2442	48
Spoon Forceps, Insert, 10mm OD, 310mm WL	8395.244	48
Spoon Forceps, Insert, Modu-line, 5mm OD, 310mm WL	8393.093	33
Spoon Forceps, Insert, Modu-line, 5mm OD, 430mm WL	8394.093	33
Spoon Forceps, Modu-line, 5mm OD, 310mm WL	8393.0933	33
Spoon Forceps, Modu-line, 5mm OD, 430mm WL	8394.0933	33
Spoon Forceps, single pc, 10mm OD, 310mm WL	8385.12	51
Spoon Forceps, single pc, 10mm OD, 310mm WL	8395.2447	50
Stopcock, 3mm luer fitting	884.00	184
Stopcock, 4mm luer fitting	884.01	184
Stoppers, for 8294.60 disposable tubes	294.61	144
Suction Irrigation Tube, for Video Mediastinoscope	8783.721	149
Suction-Irrigation Handle	8385.901	76
Suction-Irrigation Tube, 3.5mm OD, 310mm WL	8391.911	78
Suction-Irrigation Tube, 3mm inner diameter, 5mm OD, 330mm WL	8383.72	83
Suction-Irrigation Tube, 4mm inner diameter, 5mm OD, 300mm WL	8383.51	83
Suction-Irrigation Tube, 5mm OD, 310mm WL	8383.911	78
Suction-Irrigation Tube, 5mm OD, 450mm WL	8384.911	78
Suction-Irrigation Tube, coag, w/ luer lock, 3mm OD, 450mm WL	8380.71	82
Suction-Irrigation Tube, curved tip, 5mm OD, 310mm WL	8383.912	78
Suction-Irrigation Tube, for aqua dissection, 5mm OD, 310mm WL	8383.913	78
Suction-Irrigation Tube, w/ 2 way lever, 5mm OD, 290mm WL	8383.732	84
Suction-Irrigation Tube, w/ 2 way lever, 5mm OD, 410mm WL	8384.732	84
Suction-Irrigation Tube, w/ finger valves, 5mm OD, 300mm WL	8383.94	84
Suction-Irrigation tube, w/ trumpet valve, 5mm OD, 320mm WL	8383.755	84
Suction-Irrigation Tube, w/ valve, 5mm OD, 330mm WL	8383.68	83
Suction-Irrigation Tube, w/ valve, 5mm OD, 445mm WL	8384.68	83, 145
TEM, Cart with 2 shelves	41066.3109	125
TEM, CO2 Insufflator unit	2232.641	125
TEM, Combination Pump / Insufflator unit	2232.211	125
TEM, Documentation scope, 6.6mm OD, 40 degree	8840.401	118

Description	Product #	Page #
TEM, Grasping Forcep, angled down and curved left	8840.622	120
TEM, Grasping Forcep, angled down and curved right	8840.621	120
TEM, Grasping Forcep, straight and curved left	8840.624	120
TEM, Grasping Forcep, straight and curved right	8840.623	120
TEM, Handle and Bridge Assembly	8840.20	119
TEM, Irrigation Bottle Connector	8383.951	125
TEM, Knife HF, curved left	8840.711	121
TEM, Knife HF, curved right	8840.712	121
TEM, Martin Arm	8840.9721	124
TEM, Martin Arm Clamp	8840.9722	124
TEM, Needle Holder, angled down	8840.604	122
TEM, Needle Holder, straight	8840.605	122
TEM, Pump unit	2232.644	125
TEM, Rectoscope Tube, 120mm long, oblique edge	8840.021	119
TEM, Rectoscope Tube, 137mm long, flat edge	8840.031	119
TEM, Rectoscope Tube, 200mm long, oblique edge	8840.041	119
TEM, Retractable Needle	8840.74	123
TEM, Rinsing Sheath used with laparoscope	8840.513	118
TEM, Scissors, curved left	8840.644	121
TEM, Scissors, curved right	8840.643	121
TEM, Sealing Cone for stereoscope	8840.591	126
TEM, Silicone Sleeves, pkg of 3	8840.242	119
TEM, Stereoscope, 13.8mm OD, 50 degree	4840.501	118
TEM, Suction Coagulation tube	8840.731	123
TEM, Suture Clip Forcep	8840.762	122
TEM, Suture Clips, sterile, box of 10 packets	4840.765	122
TEM, Trainer Unit	9500.065	124
TEM, Tray for Stereoscope	38043.011	118
TEM, Viewing Window	8840.25	119
TEM, Working Faceplate	8840.241	119
Tenaculum, axial handle, 10mm OD	8385.181	61
Tenaculum, axial handle, 5mm OD	8370.26	61
Tenaculum, single pc, 10mm OD, 310mm WL	8395.2367	50
Tray, metal, 2 tiers, 20" x 9" x 4"	8585.071	159
Tray, metal, 2 tiers, 20" x 9" x 4"	8585.072	162
Tray, metal, 2 tiers, 23" x 11" x 5.3"	8585.025	160
Tray, metal, camera head, 10" x 9" x 3"	8585.101	161
Tray, metal, dual scope, 17.5" x 3.8" x 1.5"	8585.061	159
Tray, metal, extended length, 27" x 11" x 8"	8585.021	160
Tray, metal, fascial closure, 11" x 5" x 1.5"	8585.091M	161
Tray, metal, for TEM Martin Arm	8585.026	162
Tray, metal, for video mediastinoscope, 23" x 11" x 5.3"	8585.025M	160

Alpha Index

Description	Product #	Page #
Tray, metal, lap chole, 23" x 11" x 8"	8585.011	160
Tray, metal, single scope, 18" x 3" x 2.6"	8585.070	159
Tray, metal, universal long, 27" x 11" x 3.8"	8585.027	161
Tray, metal, universal with 3 brackets, 22" x 10" x 2.8"	8585.073	159
Tray, metal, universal with brackets, 23" x 11" x 3.8"	8585.023	161
Tray, plastic, 2 tiers, 20.3" x 9.5" x 4.8"	8570.011	164
Tray, plastic, 2.7mm hysteroscope set, 20" x 9" x 2"	8570.027	164
Tray, plastic, camera head, 9" x 9.7" x 1.8"	8570.101	165
Tray, plastic, compact hysteroscope set, 20" x 9" x 3"	8570.040	164
Tray, plastic, dual scope 10mm, 17" x 3.2" x 1.6"	8570.010	163
Tray, plastic, dual scope, 17" x 3.2" x 1.6"	8570.005	163
Tray, plastic, non-autoclavable, for flexible scope, 21" x 13" x 3"	573.101	166
Tray, plastic, non-autoclavable, for right angle laparoscope, 17" x 7" x	549.41	166
Tray, plastic, operating laparoscope, 20" x 9" x 1.8"	8570.041	165
Tray, plastic, single scope long, 17" x 3.2" x 1.6"	8570.017	163
Tray, plastic, single scope, 12" x 3.2" x 1.6"	8570.012	163
Tray, plastic, universal instrument, 20.3" x 9.5" x 4.8"	8570.026	164
Trocar Sleeve, 10mm OD, 100mm WL, oblique tip	8923.013	101
Trocar Sleeve, 10mm OD, 100mm WL, oblique w/ retaining thread	8923.023	101
Trocar Sleeve, 10mm OD, 100mm WL, straight tip	8923.014	101
Trocar Sleeve, 10mm OD, 100mm WL, straight w/ retaining thread	8923.024	101
Trocar Sleeve, 10mm OD, 100mm WL, trumpet valve	8934.01	102
Trocar Sleeve, 10mm OD, 100mm WL, trumpet valve oblique	8934.03	102
Trocar Sleeve, 10mm OD, 145mm WL, trumpet valve	8934.071	102
Trocar Sleeve, 10mm OD, 150mm WL, straight tip	8923.016	101
Trocar Sleeve, 10mm OD, 150mm WL, straight w/ retaining thread	8923.026	101
Trocar Sleeve, 12.5mm OD, 100mm WL, oblique	8924.013	104
Trocar Sleeve, 12.5mm OD, 100mm WL, straight	8924.014	104
Trocar Sleeve, 12.5mm OD, 150mm WL, straight	8924.016	104
Trocar Sleeve, 12.5mm OD, 150mm WL, w/ retaining thread	8924.026	104

Description	Product #	Page #
Trocar Sleeve, 12.5mm OD, 60mm WL, w/ retaining thread	8924.022	104
Trocar Sleeve, 15mm OD, w/ flap valve, 100mm WL	8943.60	105
Trocar Sleeve, 2mm OD, w/o port, 60mm WL	8309.072	93
Trocar Sleeve, 2mm OD, with port, 100mm WL	8309.014	93
Trocar Sleeve, 2mm OD, with port, 60mm WL	8309.012	93
Trocar Sleeve, 3.5mm OD, 100mm WL, straight tip	8903.014	94
Trocar Sleeve, 3.5mm OD, 100mm WL, w/ retaining thread	8903.034	94
Trocar Sleeve, 3.5mm OD, 60mm WL, w/ retaining thread	8903.072	94
Trocar Sleeve, 3.8mm OD, 100mm WL	8904.014	11
Trocar Sleeve, 3.8mm OD, 150mm WL	8904.016	11
Trocar Sleeve, 5.5mm OD, 100 mm WL, straight tip	8921.014	95
Trocar Sleeve, 5.5mm OD, 100mm WL, oblique tip	8921.013	95
Trocar Sleeve, 5.5mm OD, 100mm WL, oblique w/ retaining thread	8921.023	95
Trocar Sleeve, 5.5mm OD, 100mm WL, plastic	8921.034	95
Trocar Sleeve, 5.5mm OD, 100mm WL, w/ retaining thread	8921.024	95
Trocar Sleeve, 5.5mm OD, 100mm WL, w/ stopcock	8940.07	98
Trocar Sleeve, 5.5mm OD, 100mm WL, w/o stopcock	8351.07	98
Trocar Sleeve, 5.5mm OD, 105mm WL, plastic	8919.353	97
Trocar Sleeve, 5.5mm OD, 120mm WL, w/o stopcock	8351.03	98
Trocar Sleeve, 5.5mm OD, 150mm WL, straight tip	8921.016	95
Trocar Sleeve, 5.5mm OD, 150mm WL, w/ retaining thread	8921.026	95
Trocar Sleeve, 5.5mm OD, 55mm WL, plastic	8920.001	96
Trocar Sleeve, 5.5mm OD, 60mm WL, oblique tip	8921.051	95
Trocar Sleeve, 5.5mm OD, 60mm WL, oblique w/ retaining thread	8921.061	95
Trocar Sleeve, 5.5mm OD, 60mm WL, plastic	8921.072	95
Trocar Sleeve, 5.5mm OD, 60mm WL, straight tip	8921.052	95
Trocar Sleeve, 5.5mm OD, 60mm WL, w/ retaining thread	8921.062	95
Trocar Sleeve, 5.5mm OD, 65mm WL, plastic	8919.333	97
Trocar Sleeve, 5.5mm OD, 95mm WL, plastic	8920.003	96

Alpha Index

Description	Product #	Page #
Trocar Sleeve, 5mm OD, 55mm WL	8351.02	98
Trocar Sleeve, 7mm OD, 100mm WL, straight tip	8922.014	99
Trocar Sleeve, 7mm OD, 150mm WL, straight tip	8922.016	99
Trocar Sleeve, 8mm OD, 105mm WL, trumpet valve	8932.01	100
Trocar Sleeve, Metal, 13.6mm OD, 55mm WL	8906.081	137
Trocar Sleeve, Metal, 5.5mm OD, 75mm WL	8906.052	135
Trocar Sleeve, Metal, 7mm OD, 75mm WL	8913.01	136
Trocar Sleeve, Plastic Flexible, 10mm OD, 60mm WL	8906.011	137
Trocar Sleeve, Plastic Flexible, 12.5mm OD, 60mm WL	8906.031	137
Trocar Sleeve, Plastic Flexible, 5.5mm OD, 75mm WL	8906.051	135
Trocar Sleeve, Plastic Flexible, 7mm OD, 75mm WL	8906.001	136
Trocar, 10mm OD, 100mm WL, blunt conical tip	8923.103	101
Trocar, 10mm OD, 100mm WL, conical tip	8923.113	101
Trocar, 10mm OD, 100mm WL, pyramidal tip	8923.123	101
Trocar, 10mm OD, 150mm WL, conical tip	8923.115	101
Trocar, 10mm OD, 150mm WL, pyramidal tip	8923.125	101
Trocar, 10mm OD, 60mm WL, blunt conical tip	8906.111	137
Trocar, 12.5mm OD, 100mm WL, blunt conical tip	8924.103	104
Trocar, 12.5mm OD, 100mm WL, conical tip	8924.113	104
Trocar, 12.5mm OD, 100mm WL, pyramidal tip	8924.123	104
Trocar, 12.5mm OD, 150mm WL, conical tip	8924.115	104
Trocar, 12.5mm OD, 150mm WL, pyramidal tip	8924.125	104
Trocar, 12.5mm OD, 60mm WL, blunt conical tip	8906.131	137
Trocar, 12.5mm OD, 60mm WL, pyramidal tip	8924.121	104
Trocar, 13.6mm OD, 55mm WL, blunt conical tip	8906.181	137
Trocar, 2mm OD, 100mm WL, pyramidal tip	8309.123	93
Trocar, 2mm OD, 60mm WL, pyramidal tip	8309.121	93
Trocar, 3.5mm OD, 100mm WL, conical tip	8903.103	94
Trocar, 3.5mm OD, 100mm WL, pyramidal tip	8903.123	94

Description	Product #	Page #
Trocar, 3.5mm OD, 60mm WL, conical tip	8903.101	94
Trocar, 3.5mm OD, 60mm WL, pyramidal tip	8903.121	94
Trocar, 3.8mm OD, 100mm WL, pyramidal tip	8904.123	11
Trocar, 3.8mm OD, 150mm WL, pyramidal tip	8904.125	11
Trocar, 5.5mm OD, 100mm WL, blunt conical tip	8921.103	95
Trocar, 5.5mm OD, 100mm WL, conical tip	8921.113	95
Trocar, 5.5mm OD, 100mm WL, pyramidal tip	8351.14	98
Trocar, 5.5mm OD, 100mm WL, pyramidal tip	8921.123	95
Trocar, 5.5mm OD, 105mm WL, conical tip	8919.3512	97
Trocar, 5.5mm OD, 105mm WL, pyramidal tip	8919.3513	97
Trocar, 5.5mm OD, 150mm WL, blunt conical tip	8921.105	95
Trocar, 5.5mm OD, 150mm WL, conical tip	8921.115	95
Trocar, 5.5mm OD, 150mm WL, pyramidal tip	8921.125	95
Trocar, 5.5mm OD, 55mm WL, conical tip	8920.011	96
Trocar, 5.5mm OD, 55mm WL, pyramidal tip	8920.021	96
Trocar, 5.5mm OD, 60mm WL, blunt conical tip	8921.101	95
Trocar, 5.5mm OD, 60mm WL, conical tip	8921.111	95
Trocar, 5.5mm OD, 60mm WL, pyramidal tip	8921.121	95
Trocar, 5.5mm OD, 65mm WL, conical tip	8919.3312	97
Trocar, 5.5mm OD, 65mm WL, pyramidal tip	8919.3313	97
Trocar, 5.5mm OD, 75mm WL, blunt conical tip	8906.151	135
Trocar, 5.5mm OD, 95mm WL, conical tip	8920.013	96
Trocar, 5.5mm OD, 95mm WL, pyramidal tip	8920.023	96
Trocar, 5mm OD, 55mm WL, pyramidal tip	8351.122	98
Trocar, 7mm OD, 100mm WL, blunt conical tip	8922.103	99
Trocar, 7mm OD, 100mm WL, pyramidal tip	8922.123	99
Trocar, 7mm OD, 150mm WL, conical tip	8922.115	99
Trocar, 7mm OD, 150mm WL, pyramidal tip	8922.125	99
Trocar, 7mm OD, 75mm WL, blunt conical tip	8913.11	136

Alpha Index

Description	Product #	Page #
Trocar, 8mm OD, 105mm WL, pyramidal tip	8932.12	100
Trocar, Spare Parts, ball valve	8921.901	183
Trocar, Spare Parts, ball valve	8923.901	183
Trocar, Spare Parts, base cover	15135.080	182
Trocar, Spare Parts, base cover	15135.153	182
Trocar, Spare Parts, base cover	15135.252	183
Trocar, Spare Parts, cap housing	15135.270	96, 182
Trocar, Spare Parts, inner ring	819.912	183
Trocar, Spare Parts, o-rings	8921.951	183
Trocar, Spare Parts, o-rings	8923.951	183
Trocar, Spare Parts, sleeve cap	15114.043	183
Trocar, Spare Parts, sleeve cap	15114.044	183
Trocar, Spare Parts, sleeve cap	15114.045	183
Trocar, Spare Parts, sleeve cap	15157.189	183
Trocar, Spare Parts, sleeve cap	15157.190	183
Trocar, Spare Parts, spring	15006.087	182
Trocar, Spare Parts, spring	15006.161	182
Trocar, Spare Parts, spring	15006.293	183
Trocar, Spare Parts, union nut	15009.159	183
Trocar, Spare Parts, washer	819.902	183
Trocar, Trotec, conical sheath & rod, 10mm OD, 100mm WL	8923.131	106
Trocar, Trotec, conical sheath & rod, 12.5mm OD, 100mm WL	8924.131	106
Trocar, Trotec, conical sheath & rod, 5.5mm OD, 100mm WL	8921.131	106
Trocar, Trotec, linear sheath & rod, 10mm OD, 100mm WL	8923.133	106
Trocar, Trotec, linear sheath & rod, 12.5mm OD, 100mm WL	8924.133	106
Trocar, Trotec, linear sheath & rod, 5.5mm OD, 100mm WL	8921.133	106
Trocar, Trotec, sheath w/ conical tip, 10mm OD, 100mm WL	8923.132	106
Trocar, Trotec, sheath w/ conical tip, 12.5mm OD, 100mm WL	8924.132	106
Trocar, Trotec, sheath w/ conical tip, 5.5mm OD, 100mm WL	8921.132	106
Trocar, Trotec, sheath w/ linear tip, 10mm OD, 100mm WL	8923.134	106
Trocar, Trotec, sheath w/ linear tip, 12.5mm OD, 100mm WL	8924.134	106
Trocar, Trotec, sheath w/ linear tip, 5.5mm OD, 100mm WL	8921.134	106
Trocar, Trotec, spring mounted rod	8923.135	106
Tube Set adapter, universal, for insufflator	886.231	113
Tubes, for Powder Spray, disposable, pk of 100	8294.60	144
Tubing Kit, for TEM, with tubing, hand blower, and clips	4170.811	126
Tubing Set, for suction port on 2215.002	4170.902	81
Tubing Set, for TEM, ea	4170.801	126
Tubing Set, high flow, for insufflator, box/10	4170.512	113

Description	Product #	Page #
Tubing Set, Suction-Irrigation, for 2215.002	4170.225	81
Tubing Set, Suction-Irrigation, for 8385.901	4170.956	76
Tumor Grasper, Large, 4mm OD, 215mm WL	8283.53	151
Tumor Grasper, Medium, 4mm OD, 215mm WL	8283.52	151
Tumor Grasper, Small, 3mm OD, 215mm WL	8283.51	151
Twin Bellows	127.00	144
Universal Grasper 15mm, Insert, Modu-line, 5mm OD, 310mm WL	8393.481	28
Universal Grasper 15mm, Modu-line, 5mm OD, 310mm WL	8393.4814	28
Universal Grasper 25mm, Insert, Modu-line, 5mm OD, 310mm WL	8393.482	28
Universal Grasper 25mm, Insert, Modu-line, 5mm OD, 430mm WL	8394.482	28
Universal Grasper 25mm, Modu-line, 5mm OD, 310mm WL	8393.4822	28
Universal Grasper 25mm, Modu-line, 5mm OD, 430mm WL	8394.4822	28
Universal Grasper, 10mm OD, 310mm WL	8395.2242	47
Universal Grasper, 2mm OD, 240mm WL	8756.121	23
Universal Grasper, 3.5mm OD, 240mm WL	8390.2544	24
Universal Grasper, 3.5mm OD, 310mm WL	8391.2544	24
Universal Grasper, Insert, 10mm OD, 310mm WL	8395.224	47
Universal Grasper, Insert, 3.5mm OD, 240mm WL	8390.254	24
Universal Grasper, Insert, 3.5mm OD, 310mm WL	8391.254	24
Universal Grasper, single pc, 5mm OD, 310mm WL	8393.2549	35
Valve Door Seals, for 8943.60 trocar sleeve, pkg of 10	8943.603	105
Verres needle & cannula, 2.3mm OD, 140mm WL	8754.202	7
Verres needle & cannula, 2.3mm OD, 250mm WL	8754.201	7
Verres Needle, 120mm WL	8302.12	111
Verres Needle, 150mm WL	8302.15	111
Verres Needle, 80mm WL	8302.08	111
Verres Needle, spare part, pin	15020.076	184
Verres Needle, spare part, spring	15006.176	184
Verres Needle, spare part, stopcock knob	15039.008	184
Verres Needle, spare part, stopcock valve cap	15040.012	184
Video Mediastinoscope, with integrated optics, adjustable blades	8783.412	149
Video Mediastinoscope, with integrated optics, fixed blade	8784.411	149

Alpha Index

Description	Product #	Page #
Wave Side Grasper DA, Insert, Modu-line, 5mm OD, 310mm WL	8393.293	30
Wave Side Grasper DA, Insert, Modu-line, 5mm OD, 430mm WL	8394.293	30
Wave Side Grasper DA, Modu-line, 5mm OD, 310mm WL	8393.2932	30
Wave Side Grasper DA, Modu-line, 5mm OD, 430mm WL	8394.2932	30
Wave Side Grasper DA, single pc, 5mm OD, 310mm WL	8393.2937	35
Wave Side Grasper DA, single pc, 5mm OD, 430mm WL	8394.2937	35
Wave Side Grasper SA, Insert, Modu-line, 5mm OD, 310mm WL	8393.292	30
Wave Side Grasper SA, Insert, Modu-line, 5mm OD, 430mm WL	8394.292	30
Wave Side Grasper SA, Modu-line, 5mm OD, 310mm WL	8393.2922	30
Wave Side Grasper SA, Modu-line, 5mm OD, 430mm WL	8394.2922	30
Wave Side Grasper SA, single pc, 5mm OD, 310mm WL	8393.2927	35
Wave Side Grasper SA, single pc, 5mm OD, 430mm WL	8394.2927	35
Yoke, CO2	2026.64	113

Numeric Index

Product #	Description	Page #
102.01	Anti-Fogging Solution, UltraStop	170
102.021	Anti-Fogging Solution, Mr. Clear	171
127.00	Twin Bellows	144
127.0005	Hand Blower, sterile, box of 5	126
15006.087	Trocar, Spare Parts, spring	182
15006.161	Trocar, Spare Parts, spring	182
15006.176	Verres Needle, spare part, spring	184
15006.293	Trocar, Spare Parts, spring	183
15009.159	Trocar, Spare Parts, union nut	183
15020.076	Verres Needle, spare part, pin	184
15039.008	Verres Needle, spare part, stopcock knob	184
15040.012	Verres Needle, spare part, stopcock valve cap	184
15072.014	Kleppinger, Spare Parts, sealing cap housing	181
15114.043	Trocar, Spare Parts, sleeve cap	183
15114.044	Trocar, Spare Parts, sleeve cap	183
15114.045	Trocar, Spare Parts, sleeve cap	183
15135.080	Trocar, Spare Parts, base cover	182
15135.153	Trocar, Spare Parts, base cover	182
15135.252	Trocar, Spare Parts, base cover	183
15135.270	Trocar, Spare Parts, cap housing	96, 182
15157.189	Trocar, Spare Parts, sleeve cap	183
15157.190	Trocar, Spare Parts, sleeve cap	183
15176.097	Plastic housing, grey, for sealing cap on 8911.311	17, 133
15181.002	Kleppinger, Spare Parts, guide tubing	181
15181.003	Kleppinger, Spare Parts, guide tubing	181
15256.382	Metal instrument port fitting	10, 184
15364.067	O-Ring, for faceplate 8840.241	126
15364.068	O-Ring, for rotatable stopcock	184
18.01RE	Sealing Cap, red, long, 1mm-2mm	184
2026.62	CO2 Hose	113
2026.64	CO2 Yoke	113
2148.95	Membrane Filter, for Powder Spray, pk of 50	144
2215.002	Laparopump, for suction-irrigation	80
2215.972	Canisters, suction, Bemis, box of 36	81
2215.973	Canister rings, box of 12	81
2215.974	I.V. Pole, w/ 5 arm base	81
2232.211	TEM, Combination Pump / Insufflator unit	125
2232.601	Insufflator, CO2, 30 l/min	112
2232.621	Insufflator, CO2, 30 l/min, w/ gas warming feature	112
2232.641	TEM, CO2 Insufflator unit	125
2232.644	TEM, Pump unit	125
2236.6011	Insufflator, 40 L/min, laparoscopic CO2	113
2320.002	Scope Warmer, with 4 tube inserts	173
2352.011	Bipolar Generator	71
294.61	Stoppers, for 8294.60 disposable tubes	144
31110.901	Mounting rail for 2215.002	81
31110.902	Clamps for mounting rail, set/2	81
31110.905	Pole for mounting rail and clamps	81
37500.001	EndoMotion, mechanical support arm	175

Product #	Description	Page #
38043.011	TEM, Tray for Stereoscope	118
4106.0330	Cable, Monopolar, for forceps, Valleylab disposable, box/10	177
4106.1320	Cable, Monopolar, for forceps, Wolf disposable, box/10	177
41066.3109	TEM, Cart with 2 shelves	125
415.0030	Cable, Monopolar, for resectoscope, Valleylab disposable, box/10	177
4170.225	Tubing Set, Suction-Irrigation, for 2215.002	81
4170.512	Tubing Set, high flow, for insufflator, box/10	113
4170.801	Tubing Set, for TEM, ea	126
4170.811	Tubing Kit, for TEM, with tubing, hand blower, and clips	126
4170.902	Tubing Set, for suction port on 2215.002	81
4170.956	Tubing Set, Suction-Irrigation, for 8385.901	76
4171.111	Filters, for gas warming tubing, box/10	113
4393.2865	PowerBlade Bipolar Forcep, w/ Valleylab connector, 5mm OD, 310mm	69
4393.3865	PowerBlade Bipolar Forcep, w/ Wolf connector, 5mm OD, 310mm WL,	69
4394.2865	PowerBlade Bipolar Forcep, w/ Valleylab connector, 5mm OD, 430mm	69
4394.3865	PowerBlade Bipolar Forcep, w/ Wolf connector, 5mm OD, 430mm WL,	69
4840.501	TEM, Stereoscope, 13.8mm OD, 50 degree	118
4840.765	TEM, Suture Clips, sterile, box of 10 packets	122
549.41	Tray, plastic, non-autoclavable, for right angle laparoscope, 17" x 7" x	166
5510.891	Drape, Camera, sterile, pkg of 50	175
573.101	Tray, plastic, non-autoclavable, for flexible scope, 21" x 13" x 3"	166
6.01	Cleaning Brush, 11mm OD, 100mm BL, 360mm OL	168
6.011	Cleaning Brush, 3/5mm OD, 40/100mm BL, 250mm OL	169
6.012	Cleaning Brush, 3/13mm OD, 40/100mm BL, 250mm OL	169
6.03	Cleaning Brush, 5mm OD, 50mm BL, 375mm OL	168
6.04	Cleaning Brush, 2mm OD, 50mm BL, 400mm OL	168
6.041	Cleaning Brush, 3mm OD, 50mm BL, 365mm OL	168
6.045	Cleaning Brush, 2mm OD, 50mm BL, 240mm OL	168
6.05	Cleaning Brush, 5mm OD, 60mm BL, 515mm OL	168
6.06	Cleaning Brush, 5mm OD, 50mm BL, 240mm OL	168
6.061	Cleaning Brush, 1.8mm OD, 55mm BL, 610mm OL	168

Numeric Index

Product #	Description	Page #
6.0624	Cleaning Brush, 0.8mm OD, 12mm BL, 610mm OL	168
6.0640	Cleaning Brush, 1.3mm OD, 25mm BL, 610mm OL	168
6.07	Cleaning Brush, 13mm OD, 80mm BL, 340mm OL	168
6.24	Cleaning Brush, 5mm OD, 10mm BL, 2200mm OL	169
6.40	Cleaning Brush, 8mm OD, 12mm BL, 2200mm OL	169
6.70	Cleaning Brush, 12mm OD, 20mm BL, 2350mm OL	169
6199.00	Cleaning Gun, for water or air, with attachments	167
7264.691	Cleaning Brush, 3mm OD, 8mm BL, 1000mm OL	169
7321.911	Cleaning Brush, 2.5mm OD, 10mm BL, 1000mm OL	169
7325.152	Choledochoscope, flexible, 2.5mm OD, 450mm WL	19
75093.052	Spacers for mounting rail	81
8033.90	Scope Warmer, replacement tube	173
8061.0256	Light Cable, 2.5mm bundle, 3M	180
8061.0356	Light Cable, 3.5mm bundle, 3M	180
8061.0456	Light Cable, 4.5mm bundle, 3M	180
8061.16	Light Cable, fiberoptic, 1.6mm bundle, 1.8M length	19
8062.35	Light Cable, double, for using 2 instruments, 3.5mm diameter	180
8069.256	Light Cable, translucent, green, 2.5mm bundle, 3M	180
8069.356	Light Cable, translucent, blue, 3.5mm bundle, 3M	180
8069.456	Light Cable, translucent, purple, 4.5mm bundle, 3M	180
8081.00	Scope adapter, Wolf cable to Gyrus ACMI scope	178
8081.01	Scope adapter	178
8083.10	Light source adapter, Wolf cable to Gyrus ACMI light source	178
8087.00	Light cable adapter, Wolf scope to ACMI Gyrus cable	179
8088.00	Light cable adapter, Wolf scope to Storz cable	179
8088.80	Light cable adapter, Wolf scope to Olympus cable	179
8088.81	Light cable adapter, Wolf scope to Olympus WA03 cable	179
8091.00	Scope adapter, Wolf cable to Storz scope	178
8094.00	Light source adapter, Wolf cable to Dyonics Stryker light source	178
8095.00	Scope adapter, Wolf scope to Wolf cable	179
8095.05	Scope adapter, Wolf cable to Wolf scope	178
8096.811	Light source adapter, Wolf cable to Olympus light source	178

Product #	Description	Page #
8096.85	Light source adapter, Wolf cable to Fuji light source	178
8097.11	Light source adapter, Wolf cable to Machida light source	178
8106.033	Cable, Monopolar, for forceps, Valleylab style, 3m	177
8106.053	Cable, Monopolar, for forceps, Valleylab style, 5m	177
8106.132	Cable, Monopolar, for forceps, Wolf style, 3m	177
8106.815	Cable, Adapter for HF cable 8106 to 815	177
8108.011	Cable, Bipolar, for forceps, Wolf disposable, box/10	176
8108.031	Cable, Bipolar, for forceps, Wolf style, 3m	176
8108.032	Cable, Bipolar, for forceps, Erbe style, 3m	176
8108.033	Cable, Bipolar, for forceps, Valleylab style, 3m	176
8108.034	Cable, Bipolar, for forceps, Conmed style, 3m	176
8108.051	Cable, Bipolar, for forceps, Wolf style, 5m	176
8108.053	Cable, Bipolar, for forceps, Valleylab style, 5m	176
8108.131	Cable, Bipolar, for tweezer, Wolf style, 3m	176
8108.133	Cable, Bipolar, for tweezer, Valleylab style, 3m	176
8148.02	Sponger, 5mm OD, 300mm WL	139, 153
815.033	Cable, Monopolar, for resectoscope, Valleylab style, 3m	177
815.053	Cable, Monopolar, for resectoscope, Valleylab style, 5m	177
815.132	Cable, Monopolar, for resectoscope, Wolf style, 3m	177
8150.19	Aspiration Tube, 3mm OD, 100mm WL	144
8170.201	Gas Warming Tubing Set, for insufflator, reusable	113
8175.601	Scope Holder, articulating, for instruments 5mm - 12mm	53, 174
8188.02	Mediastinoscopy Coag-Suction Tube, 5mm OD, 250mm WL	155
8188.11	Mediastinal Cannula, 2mm OD, 260mm WL	154
819.902	Trocar, Spare Parts, washer	183
819.912	Trocar, Spare Parts, inner ring	183
823.05	Electrode, Button, flexible, 5 Fr., 395mm WL	11
823.06	Electrode, button, flexible, 6 Fr.	73
824.05	Electrode, Needle, flexible, 5 Fr., 395mm WL	11
8242.301	Electrode, Hook, Curved tip, 5mm OD, 340mm WL	146
8242.451	Needle Holder, Curved, 5mm OD, 300mm WL	147

Numeric Index

Product #	Description	Page #
8242.601	Parenchyma Forceps, 30mm Jaw Curved Left, 5mm OD, 260mm WL	141
8242.602	Parenchyma Forceps, 30mm Jaw Curved Right, 5mm OD, 260mm WL	141
8242.603	Parenchyma Forceps, 50mm Jaw Curved Left, 5mm OD, 260mm WL	141
8242.604	Parenchyma Forceps, 50mm Jaw Curved Right, 5mm OD, 260mm WL	141
8242.611	Lung Grasping Forceps, 5mm OD, 270mm WL	142
8242.651	Artery Forceps, Curved Left, 5mm OD, 270mm WL	142
8242.652	Artery Forceps, Curved Right, 5mm OD, 270mm WL	142
8242.951	Probe, Guide, 4mm OD, 590mm WL	138
8243.461	Knot Pusher, 5mm OD, 240mm WL	148
8243.502	Dissector, 7mm OD, 450mm WL	138
8243.701	Retractor, Tissue, curved, 7mm OD, 320mm WL	143
8243.901	Probe, 7mm OD, 450mm WL	138
8254.601	Microforceps, Grasper, curved left, 2.6mm OD, 215mm WL	151
8254.602	Microforceps, Grasper, curved right, 2.6mm OD, 215mm WL	151
8279.01	Sponge Forceps	153
828.651	Forceps, 3 Fr., flexible, grasper, 950mm WL	19
8280.22	Mediastinoscopy Forceps, Universal Grasper, 3mm OD, 260mm WL	152
8280.26	Mediastinoscopy Forceps, Tumor Grasper, 3mm OD, 260mm WL	152
8283.51	Tumor Grasper, Small, 3mm OD, 215mm WL	151
8283.52	Tumor Grasper, Medium, 4mm OD, 215mm WL	151
8283.53	Tumor Grasper, Large, 4mm OD, 215mm WL	151
829.601	Forceps, 3 Fr., flexible, biopsy, 950mm WL	19
8291.101	Mediastinoscopy Coag-Aspirator, 2.8mm OD, 210mm WL	155
8291.102	Mediastinoscopy Coag-Aspirator, 4mm OD, 210mm WL	155
8294.03	Diffuser for Powder Spray	144
8294.60	Tubes, for Powder Spray, disposable, pk of 100	144
8294.701	Pleural Abrader, 4.5mm OD, 500mm WL	144
8294.751	Pleural Needle, 2.8mm, 80mm WL	148
8294.82	Collar for Diffuser 8294.03	144
8302.08	Verres Needle, 80mm WL	111
8302.12	Verres Needle, 120mm WL	111
8302.15	Verres Needle, 150mm WL	111
8309.012	Trocar Sleeve, 2mm OD, with port, 60mm WL	93
8309.014	Trocar Sleeve, 2mm OD, with port, 100mm WL	93

Product #	Description	Page #
8309.072	Trocar Sleeve, 2mm OD, w/o port, 60mm WL	93
8309.121	Trocar, 2mm OD, 60mm WL, pyramidal tip	93
8309.123	Trocar, 2mm OD, 100mm WL, pyramidal tip	93
8309.241	Aspiration-Injection Cannula, 2mm OD, 240mm WL	86
8309.261	Cannula, Liver Biopsy, 2mm OD, 240mm WL	86
8351.02	Trocar Sleeve, 5mm OD, 55mm WL	98
8351.03	Trocar Sleeve, 5.5mm OD, 120mm WL, w/o stopcock	98
8351.07	Trocar Sleeve, 5.5mm OD, 100mm WL, w/o stopcock	98
8351.122	Trocar, 5mm OD, 55mm WL, pyramidal tip	98
8351.14	Trocar, 5.5mm OD, 100mm WL, pyramidal tip	98
8370.26	Tenaculum, axial handle, 5mm OD	61
8379.452	Electrode, Hook, 3.5mm OD, 310mm WL	74
8379.462	Electrode, Button, 3.5mm OD, 310mm WL	74
8379.482	Electrode, Needle, 3.5mm OD, 310mm WL	74
8379.732	Aspiration-Injection Cannula, 3.5mm OD, 310mm WL	86
8380.40	Electrode, Button, 3mm OD, 450mm WL	73
8380.71	Suction-Irrigation Tube, coag, w/ luer lock, 3mm OD, 450mm WL	82
8382.02	Scissors, Micro, single pc, 5mm OD, 310mm WL	44
8383.00	Insertion Sleeve	87
8383.026	Scissors, Hook, single pc, 5mm OD, 310mm WL	41
8383.036	Grasper, Atraumatic Blunt, single pc, 5mm OD, 310mm WL	41
8383.037	Grasper, Atraumatic Fenestrated, single pc, 5mm OD, 310mm WL	41
8383.08	Grasper, Alligator, single pc, 5mm OD, 310mm WL	43
8383.101	Biopsy Forceps, Spiked, single pc, 5mm OD, 310mm WL	41
8383.124	Biopsy Forceps, Cutting Action, single pc, 5mm OD, 310mm WL	41
8383.127	Grasper, With Cup, single pc, 5mm OD, 310mm WL	40
8383.131	Biopsy Forceps, Hook Punch, single pc, 5mm OD, 310mm WL	41
8383.14	Grasper, Fine Structures, single pc, 5mm OD, 310mm WL	42
8383.141	Grasper, Atraumatic Fenestrated, single pc, 5mm OD, 310mm WL	42
8383.142	Grasper, Atraumatic, single pc, 5mm OD, 310mm WL	42

Numeric Index

Product #	Description	Page #
8383.210	Handle Assembly, Scissor Style, for bipolar forceps, 5mm OD, 320mm WL	65
8383.2101	Bipolar Forcep, Scissor Handle, T-grasper tong, 5mm OD, 320mm WL	65
8383.2102	Bipolar Forcep, Scissor Handle, Teflon tooth tong, 5mm OD, 320mm WL	65
8383.2103	Bipolar Forcep, Scissor Handle, Kleppinger tong, 5mm OD, 320mm WL	65
8383.2104	Bipolar Forcep, Scissor Handle, Tweezer tong, 5mm OD, 320mm WL	65
8383.2105	Bipolar Forcep, Scissor Handle, Reich paddle tong, 5mm OD, 320mm WL	65
8383.2106	Bipolar Forcep, Scissor Handle, Micro tong, 5mm OD, 320mm WL	65
8383.23	Bipolar Forcep, Open Spring Handle, T-grasper tong, 5mm OD, 320mm WL	68
8383.232	Bipolar Forcep, Open Spring Handle, Teflon tooth tong, 5mm OD, 320mm	68
8383.233	Bipolar Forcep, Open Spring Handle, Kleppinger tong, 5mm OD, 320mm WL	68
8383.234	Bipolar Forcep, Open Spring Handle, Tweezer tong, 5mm OD, 320mm WL	68
8383.235	Bipolar Forcep, Open Spring Handle, Micro tong, 5mm OD, 320mm WL	68
8383.236	Bipolar Forcep, Open Spring Handle, Reich paddle tong, 5mm OD, 320mm	68
8383.240	Handle Assembly, Syringe Style, for bipolar forceps, 5mm OD, 320mm WL	64
8383.2401	Bipolar Forcep, Syringe Handle, T-grasper tong, 5mm OD, 320mm WL	64
8383.2402	Bipolar Forcep, Syringe Handle, Teflon tooth tong, 5mm OD, 320mm WL	64
8383.2403	Bipolar Forcep, Syringe Handle, Kleppinger tong, 5mm OD, 320mm WL	64
8383.2404	Bipolar Forcep, Syringe Handle, Tweezer tong, 5mm OD, 320mm WL	64
8383.2405	Bipolar Forcep, Syringe Handle, Reich paddle tong, 5mm OD, 320mm WL	64
8383.2406	Bipolar Forcep, Syringe Handle, Micro tong, 5mm OD, 320mm WL	64
8383.2925	Slide Ratchet Forceps, Rotatable, Wave Side SA, 5mm OD, 310mm WL	39
8383.2927	Slide Ratchet Forceps, Wave Side SA, 5mm OD, 310mm WL	39
8383.2935	Slide Ratchet Forceps, Rotatable, Wave Side DA, 5mm OD, 310mm WL	39
8383.2937	Slide Ratchet Forceps, Wave Side DA, 5mm OD, 310mm WL	39
8383.40	Electrode, Button, 5mm OD, 330mm WL	75, 146
8383.41	Grasper, Grooved Plates, single pc, 5mm OD, 310mm WL	43
8383.423	Electrode, Hook, 5mm OD, 340mm WL	75
8383.425	Electrode, J-Hook, 5mm OD, 340mm WL	75
8383.426	Electrode, Needle, 5mm OD, 340mm WL	75

Product #	Description	Page #
8383.428	Electrode, Spatula, 5mm OD, 340mm WL	75
8383.46	Scissors, Sawtooth, single pc, 5mm OD, 320mm WL	44
8383.471	Biopsy Forceps, Spiked, single pc, 5mm OD, 310mm WL	43
8383.4895	Slide Ratchet Forceps, Rotatable, Retraction Grasper, 5mm OD, 310mm	39
8383.4897	Slide Ratchet Forceps, Retraction Grasper, 5mm OD, 310mm WL	39
8383.49	Cannula, Puncture, w/ suction control, 5mm OD, 315mm WL	88
8383.51	Suction-Irrigation Tube, 4mm inner diameter, 5mm OD, 300mm WL	83
8383.533	Needle Holder, Straight, 5mm OD, 310mm WL	56, 147
8383.55	Knot Pusher, IntraAbdominal, 5mm OD, 330mm WL	57
8383.551	Knot Pusher, Extracorporeal, 5mm OD, 330mm WL	57
8383.552	Knot Pusher, Extracorporeal w/ distal notch, 5mm OD, 330mm WL	58
8383.571	Petelin Dissector w/o spring action, single pc, 5mm OD, 315mm WL	45
8383.581	Petelin Dissector 30° angle, single pc, 5mm OD, 315mm WL	45
8383.582	Petelin Dissector 60° angle, single pc, 5mm OD, 315mm WL	45
8383.60	Aspiration-Injection Cannula, 22 guage, 5mm OD, 345mm WL	87, 145
8383.611	Myoma screw, 5mm	60
8383.65	Aspiration-Injection Cannula, 15 guage, 5mm OD, 345mm WL	87
8383.661	Probe, w/ cm markings, 5mm OD, 320mm WL	89
8383.662	Probe, grey matte, 5mm OD, 320mm WL	89
8383.68	Suction-Irrigation Tube, w/ valve, 5mm OD, 330mm WL	83
8383.691	Retractor, Tissue, straight, 5mm OD, 320mm WL	60
8383.6917	Retractor, Liver, 5mm	53
8383.71	Coagulation-Suction Tube, w/ trumpet valve, 5mm OD, 315mm WL	85
8383.72	Suction-Irrigation Tube, 3mm inner diameter, 5mm OD, 330mm WL	83
8383.73	Coagulation-Suction Tube, w/ stopcock valve, 5mm OD, 315mm WL	85
8383.732	Suction-Irrigation Tube, w/ 2 way lever, 5mm OD, 290mm WL	84
8383.755	Suction-Irrigation tube, w/ trumpet valve, 5mm OD, 320mm WL	84
8383.77	Aspiration-Suction Tube, 3mm inner diameter, 5mm OD, 320mm WL	83
8383.78	Ligature Loop Applicator, 5mm OD, 155mm WL	58
8383.811	Electrode, Spatula, w/ suction-irrigation channel, 5mm OD, 310mm WL	79

Numeric Index

Product #	Description	Page #
8383.812	Electrode, Hook, w/ suction-irrigation channel, 5mm OD, 310mm WL	79
8383.813	Electrode, Button, w/ suction-irrigation channel, 5mm OD, 310mm WL	79
8383.819	Irrigation attachment, w/ 2 way tap	79
8383.911	Suction-Irrigation Tube, 5mm OD, 310mm WL	78
8383.912	Suction-Irrigation Tube, curved tip, 5mm OD, 310mm WL	78
8383.913	Suction-Irrigation Tube, for aqua dissection, 5mm OD, 310mm WL	78
8383.94	Suction-Irrigation Tube, w/ finger valves, 5mm OD, 300mm WL	84
8383.951	TEM, Irrigation Bottle Connector	125
8383.974	Handle Assembly, Open Spring, for bipolar forceps, 5mm OD, 290mm WL	68
8384.022	Scissors, Hook, single pc, 5mm OD, 430mm WL	41
8384.131	Biopsy Forceps, Hook Punch, single pc, 5mm OD, 430mm WL	41
8384.14	Grasper, Fine Structures, single pc, 5mm OD, 430mm WL	42
8384.141	Grasper, Atraumatic Fenestrated, single pc, 5mm OD, 430mm WL	42
8384.210	Handle Assembly, Scissor Style, for bipolar forceps, 5mm OD, 455mm WL	65
8384.2101	Bipolar Forcep, Scissor Handle, T-grasper tong, 5mm OD, 450mm WL	65
8384.2102	Bipolar Forcep, Scissor Handle, Teflon tooth tong, 5mm OD, 450mm WL	65
8384.2103	Bipolar Forcep, Scissor Handle, Kleppinger tong, 5mm OD, 450mm WL	65
8384.2104	Bipolar Forcep, Scissor Handle, Tweezer tong, 5mm OD, 450mm WL	65
8384.2105	Bipolar Forcep, Scissor Handle, Reich paddle tong, 5mm OD, 450mm WL	65
8384.2106	Bipolar Forcep, Scissor Handle, Micro tong, 5mm OD, 450mm WL	65
8384.23	Bipolar Forcep, Open Spring Handle, T-grasper tong, 5mm OD, 450mm WL	68
8384.232	Bipolar Forcep, Open Spring Handle, Teflon tooth tong, 5mm OD, 450mm	68
8384.233	Bipolar Forcep, Open Spring Handle, Kleppinger tong, 5mm OD, 450mm WL	68
8384.234	Bipolar Forcep, Open Spring Handle, Tweezer tong, 5mm OD, 450mm WL	68
8384.235	Bipolar Forcep, Open Spring Handle, Micro tong, 5mm OD, 450mm WL	68
8384.236	Bipolar Forcep, Open Spring Handle, Reich paddle tong, 5mm OD, 450mm	68
8384.240	Handle Assembly, Syringe Style, for bipolar forceps, 5mm OD, 430mm WL	64
8384.2401	Bipolar Forcep, Syringe Handle, T-grasper tong, 5mm OD, 450mm WL	64
8384.2402	Bipolar Forcep, Syringe Handle, Teflon tooth tong, 5mm OD, 450mm WL	64
8384.2403	Bipolar Forcep, Syringe Handle, Kleppinger tong, 5mm OD, 450mm WL	64

Product #	Description	Page #
8384.2404	Bipolar Forcep, Syringe Handle, Tweezer tong, 5mm OD, 450mm WL	64
8384.2405	Bipolar Forcep, Syringe Handle, Reich paddle tong, 5mm OD, 450mm WL	64
8384.2406	Bipolar Forcep, Syringe Handle, Micro tong, 5mm OD, 450mm WL	64
8384.40	Electrode, Button, 5mm OD, 450mm WL	75
8384.423	Electrode, Hook, 5mm OD, 420mm WL	75
8384.425	Electrode, J-Hook, 5mm OD, 420mm WL	75
8384.60	Aspiration-Injection Cannula, 22 guage, 5mm OD, 415mm WL	87
8384.65	Aspiration-Injection Cannula, 15 guage, 5mm OD, 415mm WL	87, 145
8384.66	Probe, graduated, 5mm OD, 445 mm WL	89
8384.661	Probe, w/ cm markings, 5mm OD, 445mm WL	89
8384.662	Probe, grey matte, 5mm OD, 445mm WL	89
8384.68	Suction-Irrigation Tube, w/ valve, 5mm OD, 445mm WL	83, 145
8384.71	Coagulation-Suction Tube, w/ trumpet valve, 5mm OD, 450mm WL	85
8384.73	Coagulation-Suction Tube, w/ stopcock valve, 5mm OD, 450mm WL	85
8384.732	Suction-Irrigation Tube, w/ 2 way lever, 5mm OD, 410mm WL	84
8384.911	Suction-Irrigation Tube, 5mm OD, 450mm WL	78
8384.974	Handle Assembly, Open Spring, for bipolar forceps, 5mm OD, 445mm WL	68
8385.10	Grasper, 2/3 Teeth, single pc, 10mm OD, 310mm WL	51
8385.12	Grasper, Spoon, single pc, 10mm OD, 310mm WL	51
8385.13	Grasper, Alligator, single pc, 10mm OD, 310mm WL	51
8385.181	Tenaculum, axial handle, 10mm OD	61
8385.301	Myoma screw, 10mm	60
8385.50	Sleeve and Extractor, 5.5 to 10mm	109
8385.901	Suction-Irrigation Handle	76
8385.902	Sealing attachment, closed, for 8385.901	76
8385.903	Sealing attachment, with opening, for 8385.901	78
8388.241	Bipolar Forcep, Syringe Handle, Kleppinger tong, 5mm OD, 150mm WL	NA
8388.714	Bipolar Tong, Kleppinger, 5mm OD, 150mm WL	NA
8388.741	Bipolar Forcep, Spring Handle, Kleppinger tong, 5mm OD, 150mm WL	NA
8388.771	Bipolar Forcep, Sliding Handle, Kleppinger tong, 5mm OD, 150mm WL	NA
8388.991	Device stop for Hulka clip applicator w/ 8914.402	18

Numeric Index

Product #	Description	Page #
8389.911	Clip Applicator, 10mm OD, 340mm WL	59
8389.921	Outer Sheath, for bipolar sliding handle, 3.5mm OD, 440mm WL	NA
8389.991	Introducing Sleeve for 8389.911	59
8390.006	Scissors, Metz, Insert, 3.5mm OD, 240mm WL	24
8390.0063	Scissors, Metz, 3.5mm OD, 240mm WL	24
8390.204	Grasper, Atraumatic, Insert, 3.5mm OD, 240mm WL	24
8390.2044	Grasper, Atraumatic, 3.5mm OD, 240mm WL	24
8390.205	Dissector, Maryland, Insert, 3.5mm OD, 240mm WL	24
8390.2054	Dissector, Maryland, 3.5mm OD, 240mm WL	24
8390.254	Grasper, Universal, Insert, 3.5mm OD, 240mm WL	24
8390.2544	Grasper, Universal, 3.5mm OD, 240mm WL	24
8390.255	Grasper, Babcock, Insert, 3.5mm OD, 240mm WL	24
8390.2554	Grasper, Babcock, 3.5mm OD, 240mm WL	24
8391.006	Scissors, Metz, Insert, 3.5mm OD, 310mm WL	24
8391.0063	Scissors, Metz, 3.5mm OD, 310mm WL	24
8391.014	Scissors, Hook, Insert, 3.5mm OD, 310mm WL	24
8391.0143	Scissors, Hook, 3.5mm OD, 310mm WL	24
8391.204	Grasper, Atraumatic, Insert, 3.5mm OD, 310mm WL	24
8391.2044	Grasper, Atraumatic, 3.5mm OD, 310mm WL	24
8391.205	Dissector, Maryland, Insert, 3.5mm OD, 310mm WL	24
8391.2054	Dissector, Maryland, 3.5mm OD, 310mm WL	24
8391.254	Grasper, Universal, Insert, 3.5mm OD, 310mm WL	24
8391.2544	Grasper, Universal, 3.5mm OD, 310mm WL	24
8391.255	Grasper, Babcock, Insert, 3.5mm OD, 310mm WL	24
8391.2554	Grasper, Babcock, 3.5mm OD, 310mm WL	24
8391.405	Biopsy Forceps, Punch, Insert, 3.5mm OD, 310mm WL	24
8391.4053	Biopsy Forceps, Punch, 3.5mm OD, 310mm WL	24
8391.406	Biopsy Forceps, Spoon, Insert, 3.5mm OD, 310mm WL	24
8391.4063	Biopsy Forceps, Spoon, 3.5mm OD, 310mm WL	24
8391.501	Needle Holder, Straight, 3.5mm OD, 340mm WL	55

Product #	Description	Page #
8391.504	Needle Holder, Straight, Insert, 3.5mm OD, 340mm WL	55
8391.715	Bipolar Tong, Paddle, 3.5mm OD, 340mm WL	63
8391.742	Bipolar Forcep, Spring Handle, paddle tong, 3.5mm OD, 340mm WL	63
8391.911	Suction-Irrigation Tube, 3.5mm OD, 310mm WL	78
8391.921	Outer Sheath, for bipolar sliding handle, 3.5mm OD, 340mm WL	63
8392.041	Scissors, Metz, Insert, Modu-line, 5mm OD, 240mm WL	34
8392.0413	Scissors, Metz, Modu-line, 5mm OD, 240mm WL	34
8392.045	Scissors, Straight, Insert, Modu-line, 5mm OD, 240mm WL	34
8392.0453	Scissors, Straight, Modu-line, 5mm OD, 240mm WL	34
8392.181	Grasper, Atraumatic Fenestrated, Insert, Modu-line, 5mm OD, 240mm	26
8392.1814	Grasper, Atraumatic Fenestrated, Modu-line, 5mm OD, 240mm WL	26
8392.186	Babcock Grasper, Insert, Modu-line, 5mm OD, 240mm WL	26
8392.1862	Babcock Grasper, Modu-line, 5mm OD, 240mm WL	26
8392.187	Babcock Grasper Large Tip, Insert, Modu-line, 5mm OD, 240mm WL	30
8392.1872	Babcock Grasper Large Tip, Modu-line, 5mm OD, 240mm WL	30
8392.281	Maryland Dissector, Insert, Modu-line, 5mm OD, 240mm WL	25
8392.2814	Maryland Dissector, Modu-line, 5mm OD, 240mm WL	25
8392.913	Sheath, insulated, Modu-line, 5mm OD, 240mm WL	25
8393.0001	Handle, for modular forceps, non-ratcheted, w/o HF	57
8393.0002	Handle, for modular forceps, ratcheted, w/o HF	26
8393.0003	Handle, for modular forceps, non-ratcheted, w/ HF	26
8393.0004	Handle, for modular forceps, ratcheted, w/ HF	26
8393.0005	Handle, for modular forceps, axial, w/ HF	24
8393.0068	Scissors, Hook, single pc, 5mm OD, 310mm WL	38
8393.0168	Biopsy Forceps, Hook Punch, single pc, 5mm OD, 310mm WL	38
8393.0248	Scissors, Metz, single pc, 5mm OD, 310mm WL	38
8393.041	Scissors, Metz, Insert, Modu-line, 5mm OD, 310mm WL	34
8393.0413	Scissors, Metz, Modu-line, 5mm OD, 310mm WL	34
8393.044	Scissors, Micro-Metz, Insert, Modu-line, 5mm OD, 310mm WL	34

Numeric Index

Product #	Description	Page #
8393.0443	Scissors, Micro-Metz, Modu-line, 5mm OD, 310mm WL	34
8393.045	Scissors, Straight, Insert, Modu-line, 5mm OD, 310mm WL	34
8393.0453	Scissors, Straight, Modu-line, 5mm OD, 310mm WL	34
8393.081	Scissors, Hook, Insert, Modu-line, 5mm OD, 310mm WL	34
8393.0813	Scissors, Hook, Modu-line, 5mm OD, 310mm WL	34
8393.082	Hook Punch, Insert, Modu-line, 5mm OD, 310mm WL	33
8393.0823	Hook Punch, Modu-line, 5mm OD, 310mm WL	33
8393.091	Biopsy Spiked Forceps, Insert, Modu-line, 5mm OD, 310mm WL	33
8393.0913	Biopsy Spiked Forceps, Modu-line, 5mm OD, 310mm WL	33
8393.092	Biopsy Cutting Forceps, Insert, Modu-line, 5mm OD, 310mm WL	33
8393.0923	Biopsy Cutting Forceps, Modu-line, 5mm OD, 310mm WL	33
8393.093	Spoon Forceps, Insert, Modu-line, 5mm OD, 310mm WL	33
8393.0933	Spoon Forceps, Modu-line, 5mm OD, 310mm WL	33
8393.181	Grasper, Atraumatic Fenestrated, Insert, Modu-line, 5mm OD, 310mm	26
8393.1814	Grasper, Atraumatic Fenestrated, Modu-line, 5mm OD, 310mm WL	26
8393.182	Plate shaped Grasper, Insert, Modu-line, 5mm OD, 310mm WL	28
8393.1824	Plate shaped Grasper, Modu-line, 5mm OD, 310mm WL	28
8393.183	Grasper, Fenestrated, Insert, Modu-line, 5mm OD, 310mm WL	25
8393.1833	Grasper, Fenestrated, Modu-line, 5mm OD, 310mm WL	25
8393.184	Grasper S/A 20mm, Insert, Modu-line, 5mm OD, 310mm WL	28
8393.1844	Grasper S/A 20mm, Modu-line, 5mm OD, 310mm WL	28
8393.185	Grasper S/A 15mm, Insert, Modu-line, 5mm OD, 310mm WL	28
8393.1854	Grasper S/A 15mm, Modu-line, 5mm OD, 310mm WL	28
8393.186	Babcock Grasper, Insert, Modu-line, 5mm OD, 310mm WL	26
8393.1862	Babcock Grasper, Modu-line, 5mm OD, 310mm WL	26
8393.187	Babcock Grasper Large Tip, Insert, Modu-line, 5mm OD, 310mm WL	30
8393.1872	Babcock Grasper Large Tip, Modu-line, 5mm OD, 310mm WL	30
8393.195	Blunt Grasper, Insert, Modu-line, 5mm OD, 310mm WL	26
8393.1953	Blunt Grasper, Modu-line, 5mm OD, 310mm WL	26

Product #	Description	Page #
8393.196	Grasper for Fine Structures, Insert, Modu-line, 5mm OD, 310mm WL	31
8393.1964	Grasper for Fine Structures, Modu-line, 5mm OD, 310mm WL	31
8393.2049	Grasper, Atraumatic Fenestrated, single pc, 5mm OD, 310mm WL	36
8393.2058	Maryland Dissector, single pc, 5mm OD, 310mm WL	37
8393.2148	Petelin Dissector, single pc, 5mm OD, 310mm WL	37
8393.2178	Grasper, Tubal, single pc, 5mm OD, 310mm WL	37
8393.2268	Grasper, Atraumatic without cup, single pc, 5mm OD, 310mm WL	37
8393.2269	Grasper, Atraumatic without cup, single pc, 5mm OD, 310mm WL	37
8393.2298	Dissector, Long Nose, single pc, 5mm OD, 310mm WL	37
8393.2349	Grasper, Bullet Nose, single pc, 5mm OD, 310mm WL	36
8393.2368	Grasper, Atraumatic with cup, single pc, 5mm OD, 310mm WL	37
8393.2369	Grasper, Atraumatic with cup, single pc, 5mm OD, 310mm WL	37
8393.2418	Grasper Dissector, Fenestrated, single pc, 5mm OD, 310mm WL	37
8393.2468	Grasper, Wave Serrations, single pc, 5mm OD, 310mm WL	37
8393.2549	Grasper, Universal, single pc, 5mm OD, 310mm WL	35
8393.2659	Grasper, Fine Structures, single pc, 5mm OD, 310mm WL	35
8393.281	Maryland Dissector, Insert, Modu-line, 5mm OD, 310mm WL	25
8393.2814	Maryland Dissector, Modu-line, 5mm OD, 310mm WL	25
8393.282	Petelin Dissector, 30° left, Insert, Modu-line, 5mm OD, 310mm WL	29
8393.2824	Petelin Dissector, 30° left, Modu-line, 5mm OD, 310mm WL	29
8393.283	Mixter Dissector, Insert, Modu-line, 5mm OD, 310mm WL	29
8393.2834	Mixter Dissector, Modu-line, 5mm OD, 310mm WL	29
8393.285	Dolphin Nose Grasper, Insert, Modu-line, 5mm OD, 310mm WL	27
8393.2853	Dolphin Nose Grasper, Modu-line, 5mm OD, 310mm WL	27
8393.287	Grasper with Cup, Insert, Modu-line, 5mm OD, 310mm WL	25
8393.2873	Grasper with Cup, Modu-line, 5mm OD, 310mm WL	25
8393.288	Grasper, Tapered 14mm, Insert, Modu-line, 5mm OD, 310mm WL	26
8393.2884	Grasper, Tapered 14mm, Modu-line, 5mm OD, 310mm WL	26
8393.289	Dissector, Tapered, Insert, Modu-line, 5mm OD, 310mm WL	25

Numeric Index

Product #	Description	Page #
8393.2894	Dissector, Tapered, Modu-line, 5mm OD, 310mm WL	25
8393.292	Grasper, Wave Side SA, Insert, Modu-line, 5mm OD, 310mm WL	30
8393.2922	Grasper, Wave Side SA, Modu-line, 5mm OD, 310mm WL	30
8393.2927	Grasper, Wave Side SA, single pc, 5mm OD, 310mm WL	35
8393.293	Grasper, Wave Side DA, Insert, Modu-line, 5mm OD, 310mm WL	30
8393.2932	Grasper, Wave Side DA, Modu-line, 5mm OD, 310mm WL	30
8393.2937	Grasper, Wave Side DA, single pc, 5mm OD, 310mm WL	35
8393.2958	Maryland Dissector w/ cross serrations, single pc, 5mm OD,	37
8393.3227	Grasper, Debakey 30mm Jaw, single pc, 5mm OD, 310mm WL	36
8393.3237	Grasper, Debakey Curved Jaw, single pc, 5mm OD, 310mm WL	36
8393.3247	Grasper, Debakey 40mm Jaw, single pc, 5mm OD, 310mm WL	36
8393.3257	Grasper, Babcock, single pc, 5mm OD, 310mm WL	36
8393.3267	Grasper, Paddle Babcock, single pc, 5mm OD, 310mm WL	36
8393.345	Knot Pusher, Extracorporeal, Insert, Modu-line, 5mm OD, 310mm WL	57
8393.3451	Knot Pusher, Extracorporeal, Modu-line, 5mm OD, 310mm WL	57
8393.4048	Biopsy Forceps, Spiked, single pc, 5mm OD, 310mm WL	38
8393.4149	Grasper, Mixter Rt Angle, single pc, 5mm OD, 310mm WL	35
8393.4159	Grasper, Alligator, single pc, 5mm OD, 310mm WL	35
8393.4628	Dissector, Dolphin Nose, single pc, 5mm OD, 310mm WL	37
8393.481	Universal Grasper 15mm, Insert, Modu-line, 5mm OD, 310mm WL	28
8393.4814	Universal Grasper 15mm, Modu-line, 5mm OD, 310mm WL	28
8393.482	Universal Grasper 25mm, Insert, Modu-line, 5mm OD, 310mm WL	28
8393.4822	Universal Grasper 25mm, Modu-line, 5mm OD, 310mm WL	28
8393.483	Grasper, Pike Mouth, Insert, Modu-line, 5mm OD, 310mm WL	30
8393.4834	Grasper, Pike Mouth, Modu-line, 5mm OD, 310mm WL	30
8393.484	Allis Grasper, Insert, Modu-line, 5mm OD, 310mm WL	27
8393.4842	Allis Grasper, Modu-line, 5mm OD, 310mm WL	27
8393.485	Grasper with Blunt Teeth, Insert, Modu-line, 5mm OD, 310mm WL	31
8393.4854	Grasper with Blunt Teeth, Modu-line, 5mm OD, 310mm WL	31

Product #	Description	Page #
8393.486	Grasper with 1 Tooth, Insert, Modu-line, 5mm OD, 310mm WL	31
8393.4864	Grasper with 1 Tooth, Modu-line, 5mm OD, 310mm WL	31
8393.487	Grasper with 2 Teeth, Insert, Modu-line, 5mm OD, 310mm WL	31
8393.4874	Grasper with 2 Teeth, Modu-line, 5mm OD, 310mm WL	31
8393.488	Claw Grasper, 2/3 Teeth, Insert, Modu-line, 5mm OD, 310mm WL	27
8393.4882	Claw Grasper, 2/3 Teeth, Modu-line, 5mm OD, 310mm WL	27
8393.489	Grasper, Retraction 2 Teeth, Insert, Modu-line, 5mm OD, 310mm WL	27
8393.4892	Grasper, Retraction 2 Teeth, Modu-line, 5mm OD, 310mm WL	27
8393.4897	Grasper, Retraction 2 Teeth, single pc, 5mm OD, 310mm WL	35
8393.490	Grasper, 2 Teeth, Insert, Modu-line, 5mm OD, 310mm WL	27
8393.4902	Grasper, 3 Teeth, Modu-line, 5mm OD, 310mm WL	27
8393.494	Claw Grasper, Insert, Modu-line, 5mm OD, 310mm WL	30
8393.4942	Claw Grasper, Modu-line, 5mm OD, 310mm WL	30
8393.4947	Grasper, Atraumatic Bowel, single pc, 5mm OD, 310mm WL	35
8393.501	Needle Holder, Serrated Straight, 5mm OD, 340mm WL	55
8393.502	Needle Holder, Straight, 5mm OD, 340mm WL	55
8393.503	Needle Holder, Sarbu, 5mm OD, 340mm WL	55
8393.504	Needle Holder, Serrated Straight, Insert, 5mm OD, 340mm WL	55
8393.505	Needle Holder, Straight, Insert, 5mm OD, 340mm WL	55
8393.506	Needle Holder, Sarbu, Insert, 5mm OD, 340mm WL	55
8393.511	Needle Holder, Curved Right, 5mm OD, 340mm WL	55
8393.512	Needle Holder, Curved Left, 5mm OD, 340mm WL	55
8393.514	Needle Holder, Curved Right, Insert, 5mm OD, 340mm WL	55
8393.515	Needle Holder, Curved Left, Insert, 5mm OD, 340mm WL	55
8393.6557	Gastric Band Manipulator, single pc, 5mm OD, 340mm WL	52
8393.704	Bipolar Tong, T-Grasper, 5mm OD, 320mm WL	64
8393.705	Bipolar Tong, Teflon Tooth, 5mm OD, 320mm WL	64
8393.714	Bipolar Tong, Kleppinger, 5mm OD, 320mm WL	64
8393.724	Bipolar Tong, Tweezer, 5mm OD, 320mm WL	64

Numeric Index

Product #	Description	Page #
8393.725	Bipolar Tong, Reich paddle, 5mm OD, 320mm WL	64
8393.726	Bipolar Tong, Micro, 5mm OD, 320mm WL	64
8393.731	Bipolar Forcep, Spring Handle, T-grasper tong, 5mm OD, 320mm WL	67
8393.732	Bipolar Forcep, Spring Handle, Teflon tooth tong, 5mm OD, 320mm WL	67
8393.741	Bipolar Forcep, Spring Handle, Kleppinger tong, 5mm OD, 320mm WL	67
8393.761	Bipolar Forcep, Sliding Handle, T-grasper tong, 5mm OD, 320mm WL	66
8393.762	Bipolar Forcep, Sliding Handle, Teflon tooth tong, 5mm OD, 320mm WL	66
8393.771	Bipolar Forcep, Sliding Handle, Kleppinger tong, 5mm OD, 320mm WL	66
8393.781	Bipolar Forcep, Spring Handle, Tweezer tong, 5mm OD, 320mm WL	67
8393.793	Bipolar Forcep, Spring Handle, Micro tong, 5mm OD, 320mm WL	67, 140
8393.801	Bipolar Forcep, Sliding Handle, Tweezer tong, 5mm OD, 320mm WL	66
8393.803	Bipolar Forcep, Spring Handle, Reich paddle tong, 5mm OD, 320mm WL	67
8393.813	Bipolar Forcep, Sliding Handle, Micro tong, 5mm OD, 320mm WL	66
8393.823	Bipolar Forcep, Sliding Handle, Reich paddle tong, 5mm OD, 320mm WL	66
8393.913	Sheath, insulated, extended length, for modular forceps, 5mm OD, 310mm	25
8393.923	Sliding Sleeve, for bipolar forceps, 5mm OD, 320mm WL	66
8393.924	Outer Sleeve, for bipolar forceps, 5mm OD, 320mm WL	66
8393.925	Outer Sleeve, for bipolar forceps, 5mm OD, 320mm WL	67
8393.941	Handle, Axial, for modular forceps, ratcheted, w/o HF	55
8393.974	Handle, Sliding, for bipolar forceps	66
8393.975	Handle, Spring, for bipolar forceps	63
8393.978	Sleeve w/ cap, long, for bipolar forceps	63
83930.0102	Eragon Bipolar Handle, non-ratcheted	70
83930.031	Eragon Bipolar Forceps, Triangular Fenestrated Grasper, Insert, 5mm OD,	70
83930.0312	Eragon Bipolar Forceps, Triangular Fenestrated Grasper, 5mm OD,	70
83930.032	Eragon Bipolar Forceps, Maryland Dissector, Insert, 5mm OD, 310mm	70
83930.0322	Eragon Bipolar Forceps, Maryland Dissector, 5mm OD, 310mm WL	70
83930.033	Eragon Bipolar Forceps, Dolphin Grasper, Insert, 5mm OD, 310mm WL	70
83930.0332	Eragon Bipolar Forceps, Dolphin Grasper, 5mm OD, 310mm WL	70
83930.034	Eragon Bipolar Forceps, Rectangular Fenestrated Grasper, Insert, 5mm OD,	70
83930.0342	Eragon Bipolar Forceps, Rectangular Fenestrated Grasper, 5mm OD,	70

Product #	Description	Page #
83930.035	Eragon Bipolar Forceps, Blunt Grasper, Insert, 5mm OD, 310mm WL	70
83930.0352	Eragon Bipolar Forceps, Blunt Grasper, 5mm OD, 310mm WL	70
83930.036	Eragon Bipolar Forceps, Tissue Retaining Pin, Insert, 5mm OD,	70
83930.0362	Eragon Bipolar Forceps, Tissue Retaining Pin, 5mm OD, 310mm WL	70
83930.041	Eragon Bipolar Forceps, Metz Scissors, Insert, 5mm OD, 310mm WL	70
83930.0412	Eragon Bipolar Forceps, Metz Scissors, 5mm OD, 310mm WL	70
83930.921	Eragon Bipolar Sheath, non-insulated, 5mm OD, 310mm WL	70
8394.0068	Scissors, Hook, single pc, 5mm OD, 430mm WL	38
8394.0248	Scissors, Metz, single pc, 5mm OD, 430mm WL	38
8394.041	Scissors, Metz, Insert, Modu-line, 5mm OD, 430mm WL	34
8394.0413	Scissors, Metz, Modu-line, 5mm OD, 430mm WL	34
8394.045	Scissors, Straight, Insert, Modu-line, 5mm OD, 430mm WL	34
8394.0453	Scissors, Straight, Modu-line, 5mm OD, 430mm WL	34
8394.081	Scissors, Hook, Insert, Modu-line, 5mm OD, 430mm WL	34
8394.0813	Scissors, Hook, Modu-line, 5mm OD, 430mm WL	34
8394.082	Hook Punch, Insert, Modu-line, 5mm OD, 430mm WL	33
8394.0823	Hook Punch, Modu-line, 5mm OD, 430mm WL	33
8394.091	Biopsy Spiked Forceps, Insert, Modu-line, 5mm OD, 430mm WL	33
8394.0913	Biopsy Spiked Forceps, Modu-line, 5mm OD, 430mm WL	33
8394.092	Biopsy Cutting Forceps, Insert, Modu-line, 5mm OD, 430mm WL	33
8394.0923	Biopsy Cutting Forceps, Modu-line, 5mm OD, 430mm WL	33
8394.093	Spoon Forceps, Insert, Modu-line, 5mm OD, 430mm WL	33
8394.0933	Spoon Forceps, Modu-line, 5mm OD, 430mm WL	33
8394.181	Grasper, Atraumatic Fenestrated, Insert, Modu-line, 5mm OD, 430mm	26
8394.1814	Grasper, Atraumatic Fenestrated, Modu-line, 5mm OD, 430mm WL	26
8394.184	Grasper S/A 20mm, Insert, Modu-line, 5mm OD, 430mm WL	28
8394.1844	Grasper S/A 20mm, Modu-line, 5mm OD, 430mm WL	28
8394.186	Babcock Grasper, Insert, Modu-line, 5mm OD, 430mm WL	26
8394.1862	Babcock Grasper, Modu-line, 5mm OD, 430mm WL	26

Numeric Index

Product #	Description	Page #
8394.187	Babcock Grasper Large Tip, Insert, Modu-line, 5mm OD, 430mm WL	30
8394.1872	Babcock Grasper Large Tip, Modu-line, 5mm OD, 430mm WL	30
8394.195	Blunt Grasper, Insert, Modu-line, 5mm OD, 430mm WL	26
8394.1953	Blunt Grasper, Modu-line, 5mm OD, 430mm WL	26
8394.196	Grasper for Fine Structures, Insert, Modu-line, 5mm OD, 430mm WL	31
8394.1964	Grasper for Fine Structures, Modu-line, 5mm OD, 430mm WL	31
8394.2058	Maryland Dissector, single pc, 5mm OD, 430mm WL	37
8394.2268	Grasper, Atraumatic without cup, single pc, 5mm OD, 430mm WL	37
8394.2659	Grasper, Fine Structures, single pc, 5mm OD, 430mm WL	35
8394.281	Maryland Dissector, Insert, Modu-line, 5mm OD, 430mm WL	25
8394.2814	Maryland Dissector, Modu-line, 5mm OD, 430mm WL	25
8394.292	Grasper, Wave Side SA, Insert, Modu-line, 5mm OD, 430mm WL	30
8394.2922	Grasper, Wave Side SA, Modu-line, 5mm OD, 430mm WL	30
8394.2927	Grasper, Wave Side SA, single pc, 5mm OD, 430mm WL	35
8394.293	Grasper, Wave Side DA, Insert, Modu-line, 5mm OD, 430mm WL	30
8394.2932	Grasper, Wave Side DA, Modu-line, 5mm OD, 430mm WL	30
8394.2937	Grasper, Wave Side DA, single pc, 5mm OD, 430mm WL	35
8394.2958	Maryland Dissector w/ cross serrations, single pc, 5mm OD,	37
8394.3227	Grasper, Debakey 30mm Jaw, single pc, 5mm OD, 430mm WL	36
8394.3237	Grasper, Debakey Curved Jaw, single pc, 5mm OD, 430mm WL	36
8394.3247	Grasper, Debakey 40mm Jaw, single pc, 5mm OD, 430mm WL	36
8394.3267	Grasper, Paddle Babcock, single pc, 5mm OD, 430mm WL	36
8394.4628	Dissector, Dolphin Nose, single pc, 5mm OD, 430mm WL	37
8394.482	Universal Grasper 25mm, Insert, Modu-line, 5mm OD, 430mm WL	28
8394.4822	Universal Grasper 25mm, Modu-line, 5mm OD, 430mm WL	28
8394.484	Allis Grasper, Insert, Modu-line, 5mm OD, 430mm WL	27
8394.4842	Allis Grasper, Modu-line, 5mm OD, 430mm WL	27
8394.487	Grasper with 2 Teeth, Insert, Modu-line, 5mm OD, 430mm WL	31
8394.4874	Grasper with 2 Teeth, Modu-line, 5mm OD, 430mm WL	31

Product #	Description	Page #
8394.489	Grasper, Retraction 2 Teeth, Insert, Modu-line, 5mm OD, 430mm WL	27
8394.4892	Grasper, Retraction 2 Teeth, Modu-line, 5mm OD, 430mm WL	27
8394.4897	Grasper, Retraction 2 Teeth, single pc, 5mm OD, 430mm WL	35
8394.490	Grasper, 2 Teeth, Insert, Modu-line, 5mm OD, 430mm WL	27
8394.4902	Grasper, 2 Teeth, Modu-line, 5mm OD, 430mm WL	27
8394.4947	Grasper, Atraumatic Bowel, single pc, 5mm OD, 430mm WL	35
8394.502	Needle Holder, Straight, 5mm OD, 430mm WL	55
8394.503	Needle Holder, Sarbu, 5mm OD, 430mm WL	55
8394.505	Needle Holder, Straight, Insert, 5mm OD, 430mm WL	55
8394.506	Needle Holder, Sarbu, Insert, 5mm OD, 430mm WL	55
8394.511	Needle Holder, Curved Right, 5mm OD, 430mm WL	55
8394.512	Needle Holder, Curved Left, 5mm OD, 430mm WL	55
8394.514	Needle Holder, Curved Right, Insert, 5mm OD, 430mm WL	55
8394.515	Needle Holder, Curved Left, Insert, 5mm OD, 430mm WL	55
8394.704	Bipolar Tong, T-Grasper, 5mm OD, 450mm WL	64
8394.705	Bipolar Tong, Teflon Tooth, 5mm OD, 450mm WL	64
8394.714	Bipolar Tong, Kleppinger, 5mm OD, 450mm WL	64
8394.724	Bipolar Tong, Tweezer, 5mm OD, 450mm WL	64
8394.725	Bipolar Tong, Reich paddle, 5mm OD, 450mm WL	64
8394.726	Bipolar Tong, Micro, 5mm OD, 450mm WL	64
8394.731	Bipolar Forcep, Spring Handle, T-grasper tong, 5mm OD, 450mm WL	67
8394.732	Bipolar Forcep, Spring Handle, Teflon tooth tong, 5mm OD, 450mm WL	67
8394.741	Bipolar Forcep, Spring Handle, Kleppinger tong, 5mm OD, 450mm WL	67
8394.761	Bipolar Forcep, Sliding Handle, T-grasper tong, 5mm OD, 450mm WL	66
8394.762	Bipolar Forcep, Sliding Handle, Teflon tooth tong, 5mm OD, 450mm WL	66
8394.771	Bipolar Forcep, Sliding Handle, Kleppinger tong, 5mm OD, 450mm WL	66
8394.781	Bipolar Forcep, Spring Handle, Tweezer tong, 5mm OD, 450mm WL	67
8394.793	Bipolar Forcep, Spring Handle, Micro tong, 5mm OD, 450mm WL	67
8394.801	Bipolar Forcep, Sliding Handle, Tweezer tong, 5mm OD, 450mm WL	66

Numeric Index

Product #	Description	Page #
8394.803	Bipolar Forcep, Spring Handle, Reich paddle tong, 5mm OD, 450mm WL	67
8394.813	Bipolar Forcep, Sliding Handle, Micro tong, 5mm OD, 450mm WL	66
8394.823	Bipolar Forcep, Sliding Handle, Reich paddle tong, 5mm OD, 450mm WL	66
8394.913	Sheath, insulated, extended length, for modular forceps, 5mm OD, 430mm	25
8394.923	Sliding Sleeve, for bipolar forceps, 5mm OD, 450mm WL	66
8394.924	Outer Sleeve, for bipolar forceps, 5mm OD, 450mm WL	66
8394.925	Outer Sleeve, for bipolar forceps, 5mm OD, 450mm WL	67
8395.005	Scissors, Curved Left, Insert, 10mm OD, 310mm WL	49
8395.0051	Scissors, Curved Left, 10mm OD, 310mm WL	49
8395.204	Grasper, 2/3 Teeth, Insert, 10mm OD, 310mm WL	47
8395.2042	Grasper, 2/3 Teeth, 10mm OD, 310mm WL	47
8395.2047	Grasper, 2/3 Teeth, single pc, 10mm OD, 310mm WL	50
8395.214	Grasper, Babcock, Insert, 10mm OD, 310mm WL	47
8395.2142	Grasper, Babcock, 10mm OD, 310mm WL	47
8395.2147	Grasper, Babcock, single pc, 10mm OD, 310mm WL	50
8395.215	Grasper, Atraumatic Bowel, Insert, 10mm OD, 310mm WL	47
8395.2152	Grasper, Atraumatic Bowel, 10mm OD, 310mm WL	47
8395.224	Grasper, Universal, Insert, 10mm OD, 310mm WL	47
8395.2242	Grasper, Universal, 10mm OD, 310mm WL	47
8395.2247	Babcock grasper, single pc, 10mm OD, 310mm WL	50
8395.225	Dissector, Maryland, Insert, 10mm OD, 310mm WL	47
8395.2252	Dissector, Maryland, 10mm OD, 310mm WL	47
8395.226	Dissector, Right Angle, Insert, 10mm OD, 310mm WL	48
8395.2262	Dissector, Right Angle, 10mm OD, 310mm WL	48
8395.2267	Dissector, Right Angle, single pc, 10mm OD, 310mm WL	50
8395.234	Grasper, Plate Shaped, Insert, 10mm OD, 310mm WL	47
8395.2342	Grasper, Plate Shaped, 10mm OD, 310mm WL	47
8395.235	Grasper, Debakey, Insert, 10mm OD, 310mm WL	47
8395.2352	Grasper, Debakey, 10mm OD, 310mm WL	47

Product #	Description	Page #
8395.236	Grasper, Alligator, Insert, 10mm OD, 310mm WL	47
8395.2362	Grasper, Alligator, 10mm OD, 310mm WL	47
8395.2367	Tenaculum, single pc, 10mm OD, 310mm WL	50
8395.244	Grasper, Spoon, Insert, 10mm OD, 310mm WL	48
8395.2442	Grasper, Spoon, 10mm OD, 310mm WL	48
8395.2447	Grasper, Spoon, single pc, 10mm OD, 310mm WL	50
8395.504	Grasper, Atraumatic Paddle, Insert, 10mm OD, 310mm WL	48
8395.5042	Grasper, Atraumatic Paddle, 10mm OD, 310mm WL	48
8395.521	Needle Holder, Straight, 10mm OD, 340mm WL	55
8395.524	Needle Holder, Straight, Insert, 10mm OD, 340mm WL	55
8395.901	Sheath, noninsulated, for modular forceps, 10mm OD, 310mm WL	47
8397.654S01	Gastric Band Manipulator / Esophageal Dissector, Insert, 10mm OD, 370mm	52
8397.6542S01	Gastric Band Manipulator / Esophageal Dissector, 10mm OD, 370mm WL	52
8397.655	Anvil Grasper, Insert, 10mm OD, 370mm WL	52
8397.6552	Anvil Grasper, 10mm OD, 370mm WL	52
8397.6557	Gastric Band Introducer, 8mm OD, 330mm WL	52
8397.901	Sheath, noninsulated, for modular forceps, 10mm OD, 370mm WL	48
8570.005	Tray, plastic, dual scope, 17" x 3.2" x 1.6"	163
8570.010	Tray, plastic, dual scope 10mm, 17" x 3.2" x 1.6"	163
8570.011	Tray, plastic, 2 tiers, 20.3" x 9.5" x 4.8"	164
8570.012	Tray, plastic, single scope, 12" x 3.2" x 1.6"	163
8570.017	Tray, plastic, single scope long, 17" x 3.2" x 1.6"	163
8570.026	Tray, plastic, universal instrument, 20.3" x 9.5" x 4.8"	164
8570.027	Tray, plastic, 2.7mm hysteroscope set, 20" x 9" x 2"	164
8570.040	Tray, plastic, compact hysteroscope set, 20" x 9" x 3"	164
8570.041	Tray, plastic, operating laparoscope, 20" x 9" x 1.8"	165
8570.101	Tray, plastic, camera head, 9" x 9.7" x 1.8"	165
8570.9205	Scope Protectors, up to 5mm OD and 20cm WL, pk of 5	172
8570.9325	Scope Protectors, up to 5mm OD and 32cm WL, pk of 5	172
8585.011	Tray, metal, lap chole, 23" x 11" x 8"	160

Numeric Index

Product #	Description	Page #
8585.021	Tray, metal, extended length, 27" x 11" x 8"	160
8585.023	Tray, metal, universal with brackets, 23" x 11" x 3.8"	161
8585.025	Tray, metal, 2 tiers, 23" x 11" x 5.3"	160
8585.025M	Tray, metal, for video	160
8585.026	Tray, metal, for TEM Martin Arm	162
8585.027	Tray, metal, universal long, 27" x 11" x	161
8585.061	Tray, metal, dual scope, 17.5" x 3.8" x 1.5"	159
8585.070	Tray, metal, single scope, 18" x 3" x 2.6"	159
8585.071	Tray, metal, 2 tiers, 20" x 9" x 4"	159
8585.072	Tray, metal, 2 tiers, 20" x 9" x 4"	162
8585.073	Tray, metal, universal with 3 brackets, 22" x 10" x 2.8"	159
8585.091M	Tray, metal, fascial closure, 11" x 5" x 1.5"	161
8585.101	Tray, metal, camera head, 10" x 9" x 3"	161
8660.425	Laparoscope, 3.3mm OD, 70 degree, 300mm WL	9
86.90	Cleaning Brush, autoclavable, 42mm BL	169
8746.401	Laparoscope, Mini-Operating, 3.8mm OD, 12 degree, 300mm WL	10
8746.601	Biopsy Forceps, 5 Fr., 380mm WL	11
8746.621	Grasping Forceps, 5 Fr., 385 mm WL	11
8746.651	Scissors, Metz, 5 Fr., 380mm WL	11
8746.701	Probe, Blunt, 5 Fr., 410mm WL	11
8746.801	Knot Pusher, 5 Fr., 410mm WL	11
8754.201	Verres needle & cannula, 2.3mm OD, 250mm WL	7
8754.202	Verres needle & cannula, 2.3mm OD, 140mm WL	7
8754.221	Sheath, 2.8mm OD, for hysteroscope 8754.401	7
8754.401	Laparoscope, micro, 2mm OD, 0 degree, 270mm WL	7
8754.451	Laparoscope, micro, 2mm OD, 0 degree, 160mm WL	7
8756.001	Scissors, Straight, 2mm OD, 240mm WL	23
8756.011	Biopsy Forceps, Punch, 2mm OD, 240mm WL	23
8756.012	Biopsy Forceps, Punch, w/ sharp tip, 2mm OD, 240mm WL	23
8756.101	Dissector, Straight, 2mm OD, 240mm WL	23
8756.111	Grasper, Atraumatic, 2mm OD, 240mm WL	23
8756.121	Grasper, Universal, 2mm OD, 240mm WL	23
8756.201	Fascial Closure Forceps, 2mm OD	110
8756.205	Fascial Closure Kit, grasper plus 3 cones and tray	110
8783.412	Video Mediastinoscope, with integrated optics, adjustable blades	149

Product #	Description	Page #
8783.721	Suction Irrigation Tube, for Video Mediastinoscope	149
8784.411	Video Mediastinoscope, with integrated optics, fixed blade	149
88.005RE	Sealing Cap, red, up to 1mm	184
88.00RE	Sealing Cap, red, no hole	184
88.01RE	Sealing Cap, red, 1mm-2mm	184
88.02BL	Sealing Cap, blue, 2mm-3mm	184
88.03BK	Sealing Cap, black, 3mm-4mm	184
88.04GR	Sealing Cap, green, 4mm-5mm	184
88.944	Flush Port Caps, replacement, pkg of 10	184
883.00	Luer Lock Connector, 2-way stopcock, male, 3mm	184
883.01	Luer Lock Connector, 2-way stopcock, male, 4mm	184
883.12	Luer Lock Connector, 2-way water inlet, male, 4mm	184
884.00	Stopcock, 3mm luer fitting	184
884.01	Stopcock, 4mm luer fitting	184
8840.021	TEM, Rectoscope Tube, 120mm long, oblique edge	119
8840.031	TEM, Rectoscope Tube, 137mm long, flat edge	119
8840.041	TEM, Rectoscope Tube, 200mm long, oblique edge	119
8840.20	TEM, Handle and Bridge Assembly	119
8840.241	TEM, Working Faceplate	119
8840.242	TEM, Silicone Sleeves, pkg of 3	119
8840.25	TEM, Viewing Window	119
8840.401	TEM, Documentation scope, 6.6mm OD, 40 degree	118
8840.513	TEM, Rinsing Sheath used with laparoscope	118
8840.591	TEM, Sealing Cone for stereoscope	126
8840.604	TEM, Needle Holder, angled down	122
8840.605	TEM, Needle Holder, straight	122
8840.621	TEM, Grasping Forcep, angled down and curved right	120
8840.622	TEM, Grasping Forcep, angled down and curved left	120
8840.623	TEM, Grasping Forcep, straight and curved right	120
8840.624	TEM, Grasping Forcep, straight and curved left	120
8840.643	TEM, Scissors, curved right	121
8840.644	TEM, Scissors, curved left	121
8840.711	TEM, Knife HF, curved left	121
8840.712	TEM, Knife HF, curved right	121
8840.731	TEM, Suction Coagulation tube	123
8840.74	TEM, Retractable Needle	123
8840.762	TEM, Suture Clip Forcep	122
8840.9721	TEM, Martin Arm	124
8840.9722	TEM, Martin Arm Clamp	124
8852.90	End Cap, proximal	84
886.00	Luer Connector, male, 3mm	184
886.01	Luer Connector, male, 4mm	184

Numeric Index

Product #	Description	Page #
886.231	Tube Set adapter, universal, for insufflator	113
887.00	Flush Port Cap, 3mm luer	184
887.01	Luer Lock Cap, 4mm	184
8885.901	Eyepiece, RW Mount	184
89.00BK	Sealing Cap, black, up to 2mm	184
89.01RE	Sealing Cap, red, 2mm-3mm	184
89.02BL	Sealing Cap, blue, 3mm-4mm	184
89.03GY	Sealing Cap, grey, 5mm-6mm	184
89.04BR	Sealing Cap, brown, 6mm-7mm	184
89.05YE	Sealing Cap, yellow, 7mm-8mm	184
89.06GR	Sealing Cap, green, 8mm-9mm	184
89.07BK	Sealing Cap, black, 9mm-9.5mm	184
89.08RE	Sealing Cap, red, 9.5mm-10mm	184
89.09BL	Sealing Cap, blue, 10mm-12mm	184
89.10RE	Sealing Cap, red, 13mm-14mm	184
89.101	Sealing membrane, mini, pkg/10	184
89.103	Sealing membrane, pkg/10	184
89.141	Sealing Cap, TEM, for large port on silicone sleeve	119
89.171BR	Sealing Cap, brown, 6mm-7mm	184
89.20RE	Sealing Cap, red, no hole	184
89.21RE	Sealing Cap, red, no hole	184
89.90RE	Sealing Cap, red, 3.4mm-4.5mm	184
8903.014	Trocar Sleeve, 3.5mm OD, 100mm WL, straight tip	94
8903.034	Trocar Sleeve, 3.5mm OD, 100mm WL, w/ retaining thread	94
8903.072	Trocar Sleeve, 3.5mm OD, 60mm WL, w/ retaining thread	94
8903.101	Trocar, 3.5mm OD, 60mm WL, conical tip	94
8903.103	Trocar, 3.5mm OD, 100mm WL, conical tip	94
8903.121	Trocar, 3.5mm OD, 60mm WL, pyramidal tip	94
8903.123	Trocar, 3.5mm OD, 100mm WL, pyramidal tip	94
8904.014	Trocar Sleeve, 3.8mm OD, 100mm WL	11
8904.016	Trocar Sleeve, 3.8mm OD, 150mm WL	11
8904.123	Trocar, 3.8mm OD, 100mm WL, pyramidal tip	11
8904.125	Trocar, 3.8mm OD, 150mm WL, pyramidal tip	11
8906.001	Trocar Sleeve, Plastic Flexible, 7mm OD, 75mm WL	136
8906.011	Trocar Sleeve, Plastic Flexible, 10mm OD, 60mm WL	137
8906.031	Trocar Sleeve, Plastic Flexible, 12.5mm OD, 60mm WL	137
8906.051	Trocar Sleeve, Plastic Flexible, 5.5mm OD, 75mm WL	135
8906.052	Trocar Sleeve, Metal, 5.5mm OD, 75mm WL	135
8906.081	Trocar Sleeve, Metal, 13.6mm OD, 55mm WL	137

Product #	Description	Page #
8906.111	Trocar, 10mm OD, 60mm WL, blunt conical tip	137
8906.131	Trocar, 12.5mm OD, 60mm WL, blunt conical tip	137
8906.151	Trocar, 5.5mm OD, 75mm WL, blunt conical tip	135
8906.181	Trocar, 13.6mm OD, 55mm WL, blunt conical tip	137
891.00	Luer Connector, female, 3mm	184
891.011	Luer Connector, female, 4mm	184
8911.316	Instrument Port, detachable, with stopcock, for operating laparoscopes	17
8912.402	Laparoscope, Operating, 10mm OD, right angle, 0 degree, 265mm WL,	17, 133
8913.01	Trocar Sleeve, Metal, 7mm OD, 75mm WL	136
8913.11	Trocar, 7mm OD, 75mm WL, blunt conical tip	136
8913.60	Optical Forceps, Rigid, Biopsy, 5mm OD, 295mm WL	139
8914.315	Instrument Port, detachable, with stopcock, for operating laparoscopes	18
8914.402	Laparoscope, Operating, 12.5mm OD, right angle, 0 degree, 267mm WL,	18
8915.402	Laparoscope, Operating, 10mm OD, oblique angle, 0 degree, 267mm WL,	16, 134
8919.3312	Trocar, 5.5mm OD, 65mm WL, conical tip	97
8919.3313	Trocar, 5.5mm OD, 65mm WL, pyramidal tip	97
8919.333	Trocar Sleeve, 5.5mm OD, 65mm WL, plastic	97
8919.3512	Trocar, 5.5mm OD, 105mm WL, conical tip	97
8919.3513	Trocar, 5.5mm OD, 105mm WL, pyramidal tip	97
8919.353	Trocar Sleeve, 5.5mm OD, 105mm WL, plastic	97
8920.001	Trocar Sleeve, 5.5mm OD, 55mm WL, plastic	96
8920.003	Trocar Sleeve, 5.5mm OD, 95mm WL, plastic	96
8920.011	Trocar, 5.5mm OD, 55mm WL, conical tip	96
8920.013	Trocar, 5.5mm OD, 95mm WL, conical tip	96
8920.021	Trocar, 5.5mm OD, 55mm WL, pyramidal tip	96
8920.023	Trocar, 5.5mm OD, 95mm WL, pyramidal tip	96
8921.013	Trocar Sleeve, 5.5mm OD, 100mm WL, oblique tip	95
8921.014	Trocar Sleeve, 5.5mm OD, 100 mm WL, straight tip	95
8921.016	Trocar Sleeve, 5.5mm OD, 150mm WL, straight tip	95
8921.023	Trocar Sleeve, 5.5mm OD, 100mm WL, oblique w/ retaining thread	95

Numeric Index

Product #	Description	Page #
8921.024	Trocar Sleeve, 5.5mm OD, 100mm WL, w/ retaining thread	95
8921.026	Trocar Sleeve, 5.5mm OD, 150mm WL, w/ retaining thread	95
8921.034	Trocar Sleeve, 5.5mm OD, 100mm WL, plastic	95
8921.051	Trocar Sleeve, 5.5mm OD, 60mm WL, oblique tip	95
8921.052	Trocar Sleeve, 5.5mm OD, 60mm WL, straight tip	95
8921.061	Trocar Sleeve, 5.5mm OD, 60mm WL, oblique w/ retaining thread	95
8921.062	Trocar Sleeve, 5.5mm OD, 60mm WL, w/ retaining thread	95
8921.072	Trocar Sleeve, 5.5mm OD, 60mm WL, plastic	95
8921.101	Trocar, 5.5mm OD, 60mm WL, blunt conical tip	95
8921.103	Trocar, 5.5mm OD, 100mm WL, blunt conical tip	95
8921.105	Trocar, 5.5mm OD, 150mm WL, blunt conical tip	95
8921.111	Trocar, 5.5mm OD, 60mm WL, conical tip	95
8921.113	Trocar, 5.5mm OD, 100mm WL, conical tip	95
8921.115	Trocar, 5.5mm OD, 150mm WL, conical tip	95
8921.121	Trocar, 5.5mm OD, 60mm WL, pyramidal tip	95
8921.123	Trocar, 5.5mm OD, 100mm WL, pyramidal tip	95
8921.125	Trocar, 5.5mm OD, 150mm WL, pyramidal tip	95
8921.131	Trocar, Trotec, conical sheath & rod, 5.5mm OD, 100mm WL	106
8921.132	Trocar, Trotec, sheath w/ conical tip, 5.5mm OD, 100mm WL	106
8921.133	Trocar, Trotec, linear sheath & rod, 5.5mm OD, 100mm WL	106
8921.134	Trocar, Trotec, sheath w/ linear tip, 5.5mm OD, 100mm WL	106
8921.901	Trocar, Spare Parts, ball valve	183
8921.951	Trocar, Spare Parts, o-rings	183
8922.014	Trocar Sleeve, 7mm OD, 100mm WL, straight tip	99
8922.016	Trocar Sleeve, 7mm OD, 150mm WL, straight tip	99
8922.103	Trocar, 7mm OD, 100mm WL, blunt conical tip	99
8922.115	Trocar, 7mm OD, 150mm WL, conical tip	99
8922.123	Trocar, 7mm OD, 100mm WL, pyramidal tip	99
8922.125	Trocar, 7mm OD, 150mm WL, pyramidal tip	99
8923.013	Trocar Sleeve, 10mm OD, 100mm WL, oblique tip	101

Product #	Description	Page #
8923.014	Trocar Sleeve, 10mm OD, 100mm WL, straight tip	101
8923.016	Trocar Sleeve, 10mm OD, 150mm WL, straight tip	101
8923.023	Trocar Sleeve, 10mm OD, 100mm WL, oblique w/ retaining thread	101
8923.024	Trocar Sleeve, 10mm OD, 100mm WL, straight w/ retaining thread	101
8923.026	Trocar Sleeve, 10mm OD, 150mm WL, straight w/ retaining thread	101
8923.103	Trocar, 10mm OD, 100mm WL, blunt conical tip	101
8923.113	Trocar, 10mm OD, 100mm WL, conical tip	101
8923.115	Trocar, 10mm OD, 150mm WL, conical tip	101
8923.123	Trocar, 10mm OD, 100mm WL, pyramidal tip	101
8923.125	Trocar, 10mm OD, 150mm WL, pyramidal tip	101
8923.131	Trocar, Trotec, conical sheath & rod, 10mm OD, 100mm WL	106
8923.132	Trocar, Trotec, sheath w/ conical tip, 10mm OD, 100mm WL	106
8923.133	Trocar, Trotec, linear sheath & rod, 10mm OD, 100mm WL	106
8923.134	Trocar, Trotec, sheath w/ linear tip, 10mm OD, 100mm WL	106
8923.135	Trocar, Trotec, spring mounted rod	106
8923.802	Reducing Caps, reduce to 5.5mm, pkg/5	109
8923.901	Trocar, Spare Parts, ball valve	183
8923.951	Trocar, Spare Parts, o-rings	183
8924.013	Trocar Sleeve, 12.5mm OD, 100mm WL, oblique	104
8924.014	Trocar Sleeve, 12.5mm OD, 100mm WL, straight	104
8924.016	Trocar Sleeve, 12.5mm OD, 150mm WL, straight	104
8924.022	Trocar Sleeve, 12.5mm OD, 60mm WL, w/ retaining thread	104
8924.026	Trocar Sleeve, 12.5mm OD, 150mm WL, w/ retaining thread	104
8924.103	Trocar, 12.5mm OD, 100mm WL, blunt conical tip	104
8924.113	Trocar, 12.5mm OD, 100mm WL, conical tip	104
8924.115	Trocar, 12.5mm OD, 150mm WL, conical tip	104
8924.121	Trocar, 12.5mm OD, 60mm WL, pyramidal tip	104
8924.123	Trocar, 12.5mm OD, 100mm WL, pyramidal tip	104
8924.125	Trocar, 12.5mm OD, 150mm WL, pyramidal tip	104
8924.131	Trocar, Trotec, conical sheath & rod, 12.5mm OD, 100mm WL	106

Numeric Index

Product #	Description	Page #
8924.132	Trocar, Trotec, sheath w/ conical tip, 12.5mm OD, 100mm WL	106
8924.133	Trocar, Trotec, linear sheath & rod, 12.5mm OD, 100mm WL	106
8924.134	Trocar, Trotec, sheath w/ linear tip, 12.5mm OD, 100mm WL	106
8924.802	Reducing Caps, reduce to 10mm, pkg/5	109
8924.931	Dilatation Set, 10 to 12.5mm	107
8928.90	Retractor, Deaver, set of 2, 12mm OD, 170mm WL	60
8930.421	Laparoscope, 3.5mm OD, 0 degree, 300mm WL	9
8930.422	Laparoscope, 3.5mm OD, 30 degree, 300mm WL	9
8930.461	Laparoscope, 3.5mm OD, 0 degree, 180mm WL	9
8932.01	Trocar Sleeve, 8mm OD, 105mm WL, trumpet valve	100
8932.12	Trocar, 8mm OD, 105mm WL, pyramidal tip	100
8933.431	Laparoscope, 7mm OD, 0 degree, 300mm WL	13, 131
8933.432	Laparoscope, 7mm OD, 30 degree, 300mm WL	13, 131
8933.433	Laparoscope, 7mm OD, 50 degree, 300mm WL	13, 131
8934.01	Trocar Sleeve, 10mm OD, 100mm WL, trumpet valve	102
8934.03	Trocar Sleeve, 10mm OD, 100mm WL, trumpet valve oblique	102
8934.071	Trocar Sleeve, 10mm OD, 145mm WL, trumpet valve	102
8934.15	Obturator, 10mm OD, 100mm WL, blunt	103
8934.175	Obturator, 10mm OD, 150mm WL, blunt	103
8934.301	Self Retaining Sleeve, 10mm	102
8934.431	Laparoscope, 10mm OD, 0 degree, 300mm WL	14, 132
8934.432	Laparoscope, 10mm OD, 30 degree, 300mm WL	14, 132
8934.433	Laparoscope, 10mm OD, 50 degree, 300mm WL	14, 132
8934.4424	Bariatric laparoscope, 10mm OD, 30 degree, 430mm WL	15
8934.4434	Bariatric laparoscope, 10mm OD, 50 degree, 430mm WL	15
8934.901	Hasson Sliding Cone, for 10mm trocars	103
8934.915	Fascial Closure Guide, 10-12mm defects	110
8934.95	Dilatation Set, 5.5 to 10mm	107
8934.951	Guide Rod, 5.5 to 10mm	107
8934.98	Reducing Sleeve, 10 to 5mm	109
8934.981	Introducing Sleeve 5/ 10mm	45
8935.441	Laparoscope, 5mm OD Full Screen, 0 degree, 300mm WL	12
8935.442	Laparoscope, 5mm OD Full Screen, 30 degree, 300mm WL	12
8935.443	Laparoscope, 5mm OD Full Screen, 50 degree, 300mm WL	12
8940.07	Trocar Sleeve, 5.5mm OD, 100mm WL, w/ stopcock	98
8943.60	Trocar Sleeve, 15mm OD, w/ flap valve, 100mm WL	105
8943.601	Dilatation Set, 10-15mm	105
8943.602	Sealing Caps, for 15mm trocar sleeve 8943.60, pkg of 10	105
8943.603	Valve Door Seals, for 8943.60 trocar sleeve, pkg of 10	105
8943.901	Guide Rod, 10 to 15mm	107
8943.911	Dilatation Set, 10 to 15mm	108
8943.915	Fascial Closure Guide, 12-15mm defects	110
8945.915	Fascial Closure Guide, 15-20mm defects	110
8960.02	Mediastinoscope, Freiburg, 140mm WL	150
8960.03	Mediastinoscope, Freiburg, 170mm WL	150
8960.97	Guide, Telescope, to use 7mm scope with 8960.02/.03	150
9500.065	TEM, Trainer Unit	124
N110061	Kleppinger, Spare Parts, hex head screw	181
N110092	Kleppinger, Spare Parts, screw for scissor handle	181
N120030	O-Ring, for TEM irrigation bottle adapter 8383.951	126
N160044	O-Ring, for TEM irrigation bottle adapter 8383.952/953	126
N230049	Kleppinger, Spare Parts, finger guide	181
N900128	Kleppinger, Spare Parts, guide tubing for syringe style	181
N900129	Kleppinger, Spare Parts, guide tubing for syringe style	181
N900132	Kleppinger, Spare Parts, thumb ring assembly	181
N900177	Kleppinger, Spare Parts, handle assembly scissor style	181
N900191	Kleppinger, Spare Parts, outer shaft	181
N900193	Kleppinger, Spare Parts, outer shaft	181

Notes